DAEWOO ELECTRONICS

Service Guide

■ CAR AUDIO

- AGC-5200 / ACP-5200 RDS
- AGC-5220 / ACP-5220 RDS
- AGC-5240 / ACP-5240 RDS
- AGC-5260 / ACP-5260 RDS
- AGC-5280 / ACP-5280 RDS

AGC 5200 RDS : MP3 CD Player with Radio

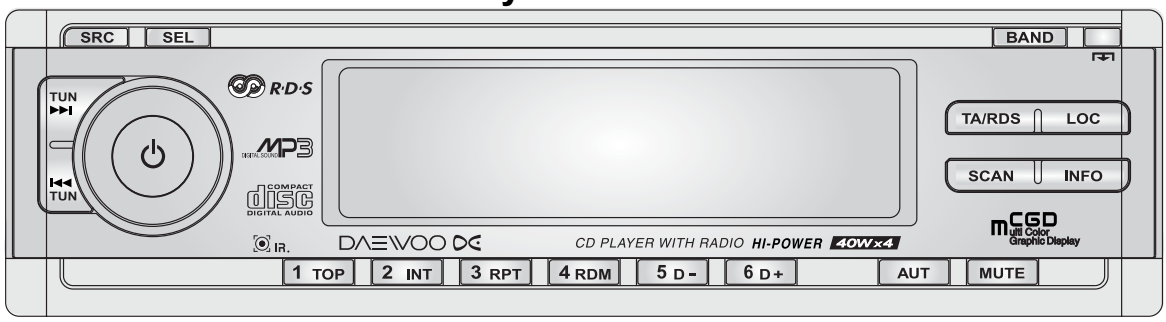

AGC 5280 RDS : USB / SD / MP3 / CD Player with Radio

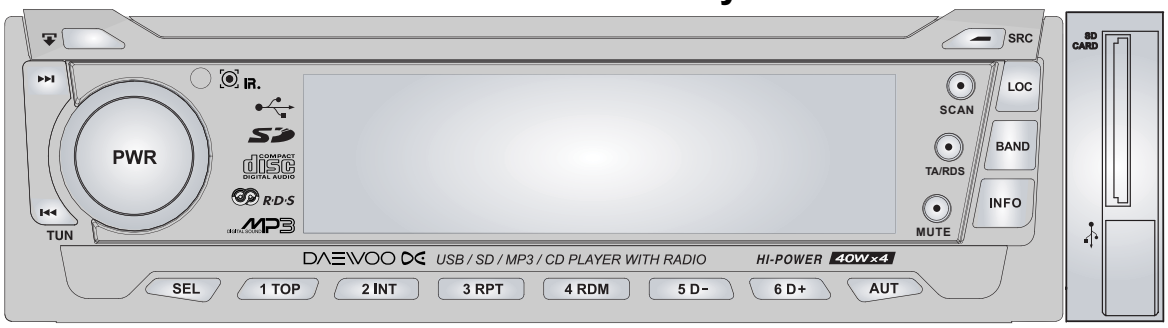

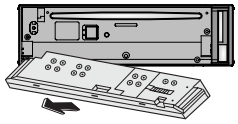

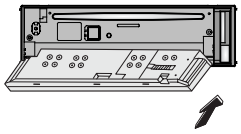

Contents

1. PRODUCT SPECIFICATION 1

2. APPEARANCE & CONNECTION 2

3. FRONT PANNEL INFOMATION 8

4. STANDARD TEST REPORT 13

5. ELECTRICAL SPECIFICATION 15

6 TROUBLE SHOOTING GUIDE 19

7. FUNCTION OF MICOM IC 20

8. IC BLOCK DIAGRAM 23

9. PARTS LOCATION ON P.C.BOARD 26

10. BLOCK & SCHEMATIC DIAGRAM 37

11. ELECTRICAL PARTS LIST 41

12. OVERALL EXPLODED VIEW 57

1. PRODUCT SPECIFICATION

S P E C I F I C A T I O N

☞ GENERAL

→ POWER	: NEGATIVE GROUND
	: 14.4V DC
→ SPEAKER IMPEADANCE	: 4-8 OHM(4 SPEAKER)
→ OUTPUT POWER (4 ohm/CH)	: 40W × 4 ch Maximum
→ Size	: 7” (W) x 2” (H) x 6-1/2” (D)
	: 178 mm x 50 mm x 160 mm
→ Fuse Ratings	: Constant (Yellow wire) : 10AMP.
→ Switched (Red wire)	: 1.0 AMP.
→ Output Wiring	: Floating - ground type designed for 4 speaker use.
→	: RCA low-level outputs.
→Low - Level Output	: 500mV

☞ RADIO SECTION

→ TUNING RANGE	-FM	: 87.5-108.0 MHz (50 kHz step)
	-MW	: 522-1620kHz (9 kHz step)
	-LW	: 144 - 288 MHz
→ SENSITIVITY	-FM	: 5dBu S/N : 30dB
	-MW	: 20dBu S/N : 20dB
→ S/N RATIO	-FM	: 80dB
	-MW	: 50dB
→ STEREO SEPERATION	-FM	: 30dB

☞ CD / MP3 CD / USB / SD CARD SECTION

→ DISC	: COMPACT DISC(12cm Std. DISC)
→ ROTATION RPM	: 1.2m/S~1.4m/S(500rpm~200rpm)
→ FREQUENCY RESPONSE	: 20Hz~20kHz
→ TOTAL HARMONIC DISTORTION	: 0.1%
→ DYNAMIC RANGE	: 60dB
→ S/N RATIO	: 60dB
→ CHANNEL SEPERATION	: 50dB

2. APPEARANCE & CONNECTION

AGC-5200 / ACP 5200 + RDS (option)

FRONT PANNEL

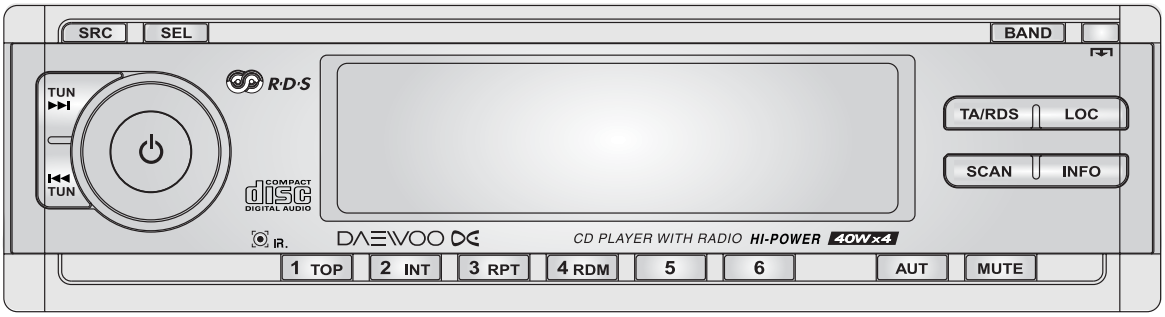

- CD / CD-R / RW Playble
- DSP (Pop / Classic / Rock)
- ESP (Electric Shock Protection)
- Face Flip Down and Full Detachable for Anti-Theft
- 4-Channel High Power Output (40W ×4Ch)
- Encoding Volume Control
- Electronic Bass / Treble / Balance / Fader Control
- 42 Station Memory Capability (18FM+12MW+12LW)
- Seek / Auto Memory
- Mute / Tel. Mute
- Aux-In

ESC.

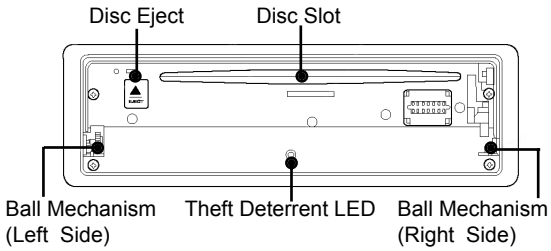

AGC-5220 / ACP 5220 + RDS (option)

FRONT PANNEL

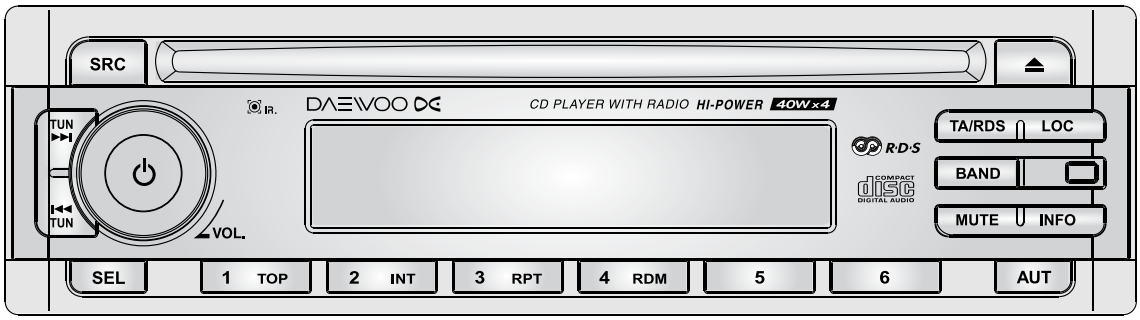

- CD / CD-R / RW Playble
- DSP (Pop / Classic / Rock)
- ESP (Electric Shock Protection)
- Face Full Detachable for Anti-Theft
- 4-Channel High Power Output (40W ×4Ch)
- Encoding Volume Control
- Electronic Bass / Treble / Balance / Fader Control
- 42 Station Memory Capability (18FM+12MW+12LW)
- Seek / Auto Memory
- Mute / Tel. Mute
- Aux-In

ESC.

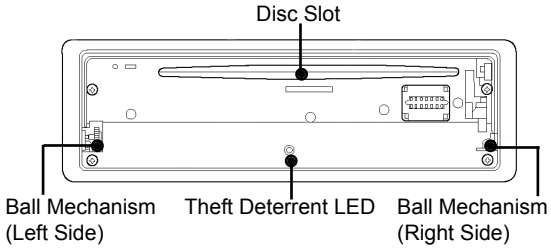

AGC-5240 / ACP 5240 + RDS (option)

FRONT PANNEL

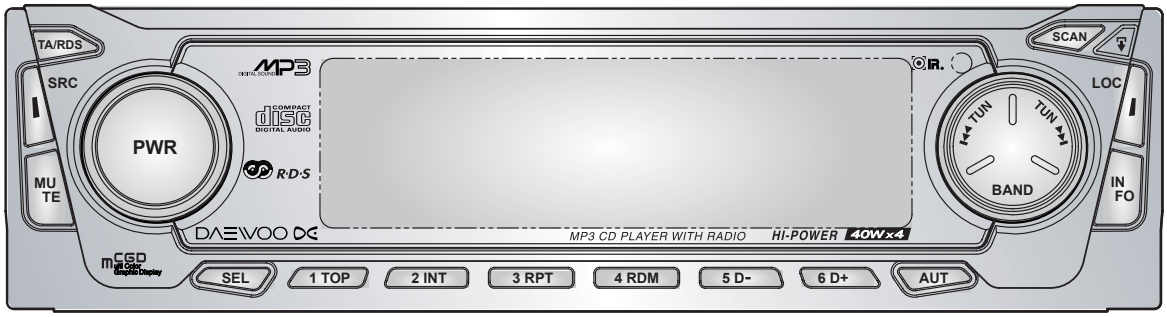

- MP3 Playback(ID3 Tag)
- CD / CD-R / RW Playable
- Black Masked Multi-Color Graphic Display
- DSP (Pop/Classic/Rock)
- ESP (Electric Shock Protection)
- Face Flip-Down and Full Detachable for Anti-Theft
- 4-Channel High Power Output(40W ×4CH)
- Encoding Volume Control
- Electronic Bass/Treble/Balance/ Fader Control
- 42 Station Memory Capability (18FM +12MW +12LW)
- Mute / Tel. Mute
- Aux-In

ESC.

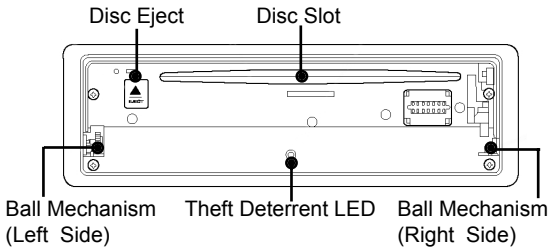

AGC-5260 / ACP 5260 + RDS (option)

FRONT PANNEL

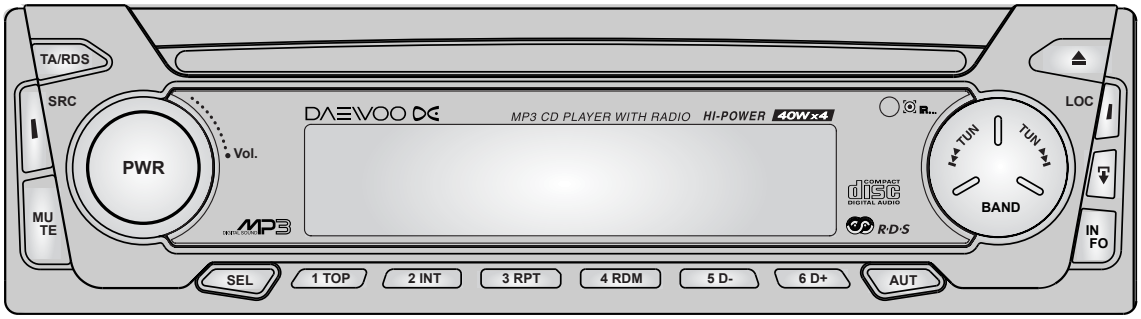

- MP3 Playback(ID3 Tag)
- CD / CD-R / RW Playable
- Black Masked Multi-Color Graphic Display
- DSP (Pop/Classic/Rock)
- ESP (Electric Shock Protection)
- Face Flip-Down and Full Detachable for Anti-Theft
- 4-Channel High Power Output(40W ×4CH)
- Encoding Volume Control
- Electronic Bass/Treble/Balance/ Fader Control
- 42 Station Memory Capability (18FM+12MW+12LW)
- Mute / Tel. Mute
- Aux-In

ESC.

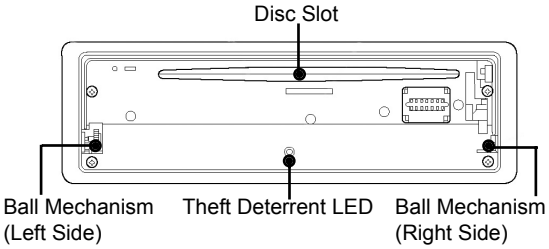

AGC-5280 / ACP 5280 + RDS (option)

FRONT PANNEL

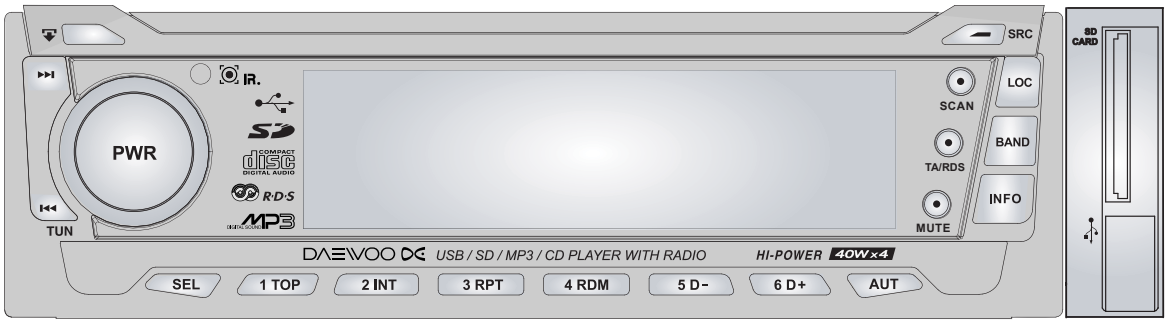

- SD Card / USB Memory
- MP3 Playback(ID3 Tag)
- CD / CD-R / RW Playable
- Black Masked Multi-Color Graphic Display
- DSP (Pop/Classic/Rock)
- ESP (Electric Shock Protection)
- Face Flip-Down and Full Detachable for Anti-Theft
- 4-Channel High Power Output(40W ×4CH)
- Encoding Volume Control
- Electronic Bass/Treble/Balance/ Fader Control
- 42 Station Memory Capability (18FM+12MW+12LW)
- Mute / Tel. Mute
- Aux-In

ESC.

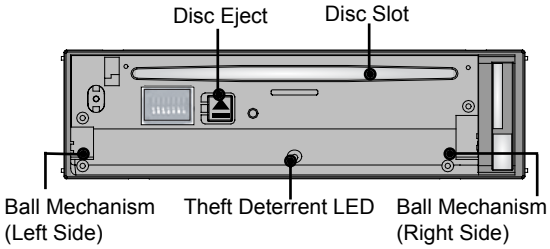

CONNECTION

■ AGC-5200,5220,5240,5260,5280 ■ ACP-5200,5220,5240,5260,5280

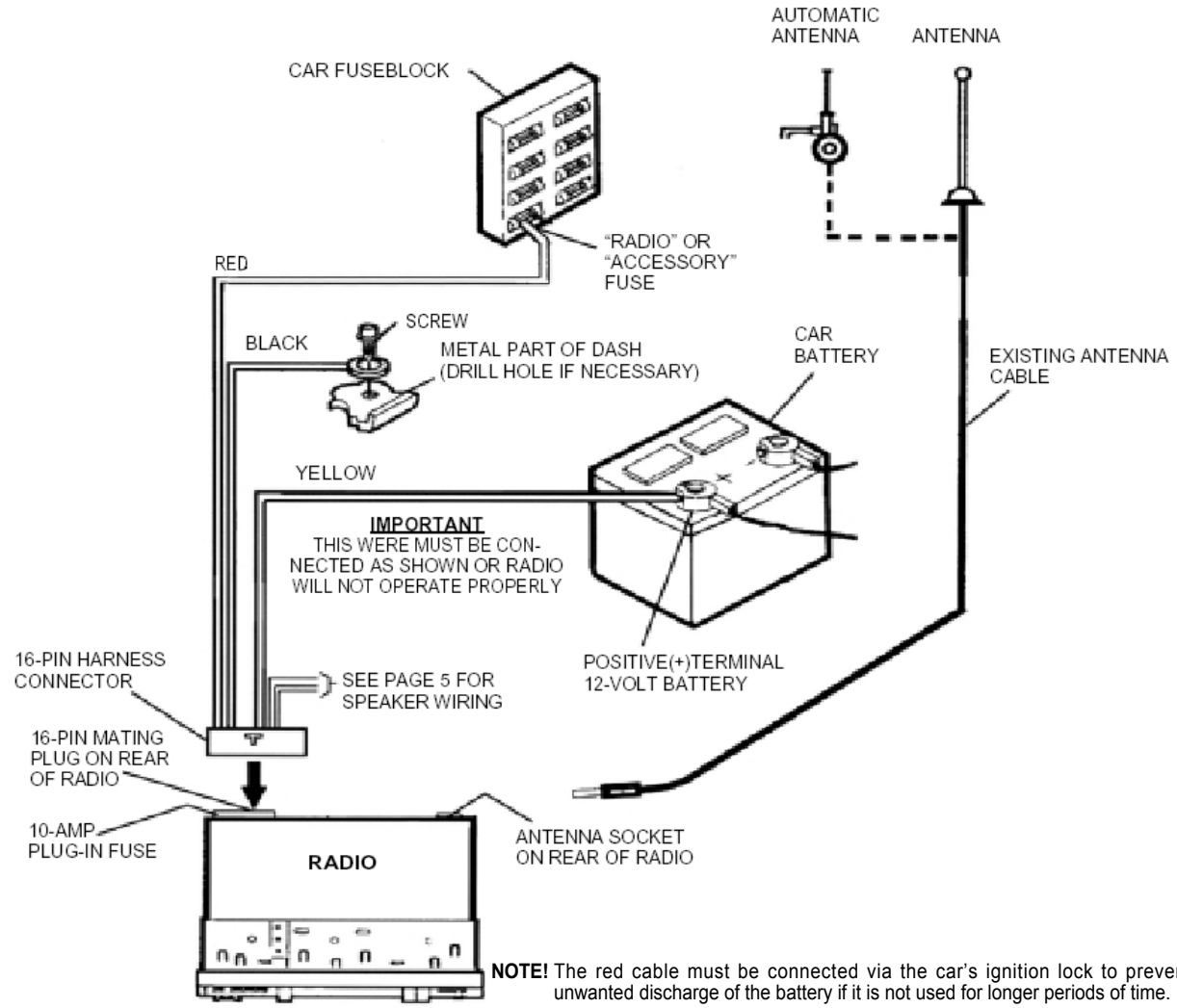

NOTE! The red cable must be connected via the car's ignition lock to prevent unwanted discharge of the battery if it is not used for longer periods of time.

■ 16 Pin ISO Connector

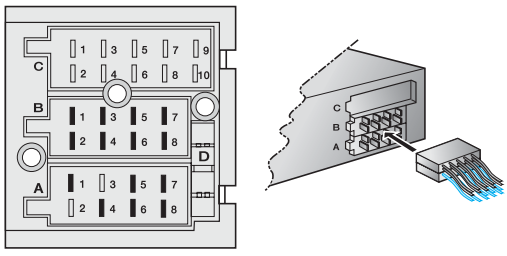

■ AUX IN / RCA JACK

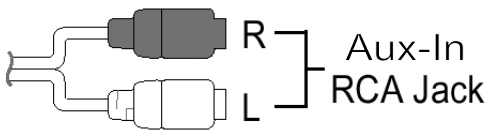

A. ELECTRIC CONNECTIONS

1. T.MUTE : BROWN
4. Back-up +12V : YELLOW
5. +12V (Automatic antenna) : BLUE
6. Dimmer : PINK
7. +12V supply (from ignition Lock) : RED
8. Ground : BLACK

B. SPEAKER CONNECTIONS

1. Right Rear (+) : VIOLET
2. Right Rear (–): VIOLET/BLACK
3. Right Front (+) : GRAY
4. Right Front (–) : GRAY/BLACK
5. Left Front (+) : WHITE
6. Left Front (–) : WHITE/BLACK
7. Left Rear (+) : GREEN
8. Left Rear (–): GREEN/BLACK

C. FUSE : 10A

D. Aux-In (RCA Cord)

3. FRONT PANNEL INFOMATION

AGC-5200 / ACP 5200 + RDS (option)

FRONT PANNEL

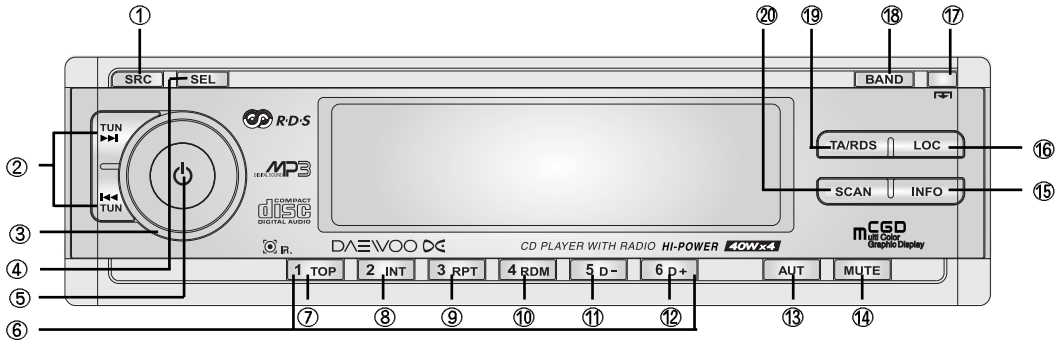

① Source Selector(Radio, AUX, CD)
② Tune/Seek Button
(Disc Track Up/Down Button,
(Cue/Review Function Button)
③ Audio (Volume) Control
④ Push Select Control Button
(Bass, Treble ,(Loudness),
DSP, Balance, Fader)
⑤ Power ON/OFF Button
⑥ Station Preset Memory Buttons
⑦ Track One Position (TOP)
⑧ Track Introduction Scan (INT)
⑨ Repeat Play (RPT)
⑩ Random Play (RDM)
⑪ Folder Down Button (#5)
⑫ Folder Up Button (#6)
⑬ Auto Store Tuning
⑭ Audio Mute Selector
⑮ Information Display
(Time, Freguency, PTY)
⑯ LOCAL Button
⑰ Front Panel Release Button
⑱ AM/FM Band Selector
⑲ TA / RDS Control Button
⑳ Scan Button

L.C.Display

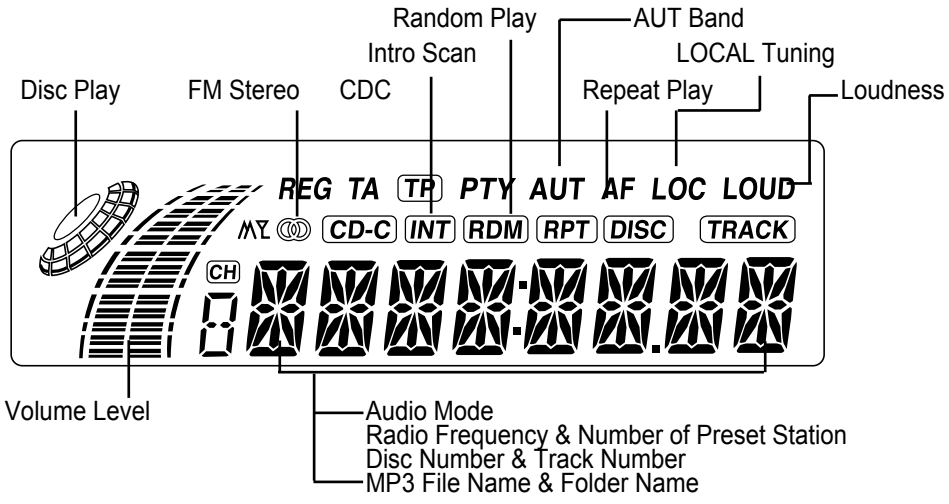

AGC-5220 / ACP 5220 + RDS (option)

FRONT PANNEL

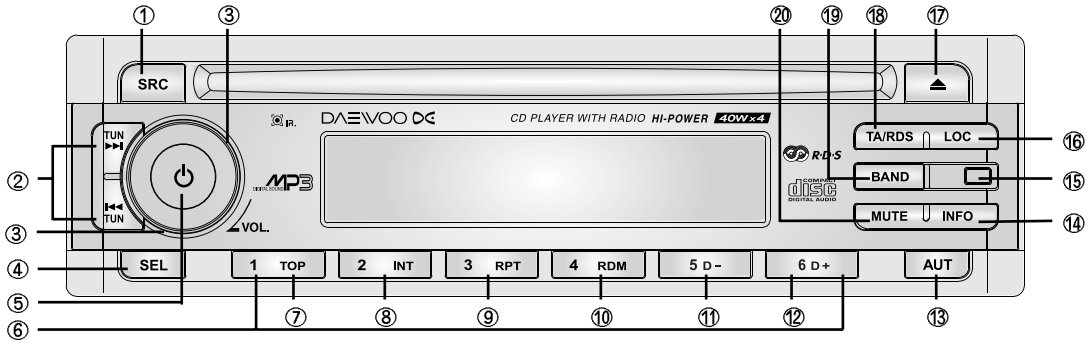

① Source Selector(Radio, AUX, CD)
② Tune/Seek Button
(Disc Track Up/Down Button,
(Cue/Review Function Button)
③ Audio (Volume) Control
④ Push Select Control Button
(Bass, Treble ,(Loudness),
DSP, Balance, Fader)
⑤ Power ON/OFF Button
⑥ Station Preset Memory Buttons
⑦ Track One Position (TOP)
⑧ Track Introduction Scan (INT)
⑨ Repeat Play (RPT)
⑩ Random Play (RDM)
⑪ Folder Down Button (#5)
⑫ Folder Up Button (#6)
⑬ Auto Store Tuning
⑭ Information Display
(Time, Freguency, PTY)
⑮ Front Panel Release Button
⑯ Local Button
⑰ CD Eject Button
⑱ TA / RDS Control Button
⑲ AM/FM Band Selector
⑳ Audio Mute Selector

L.C.Display

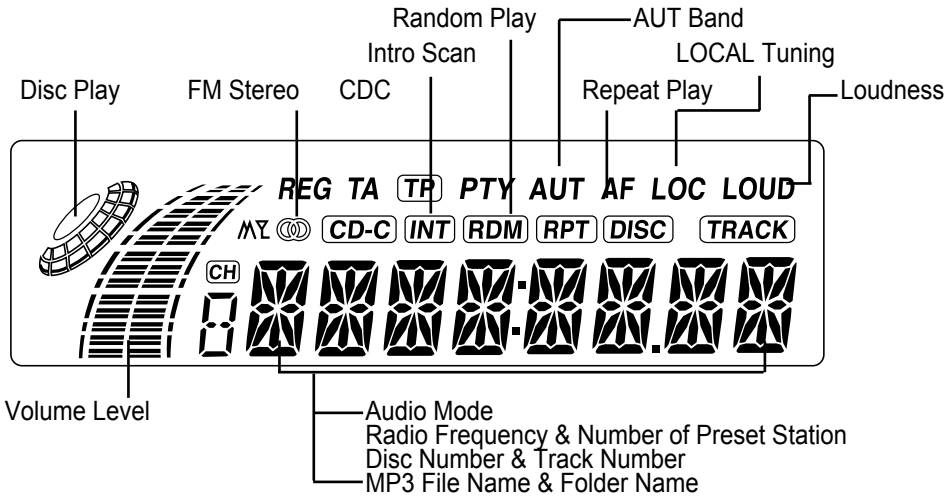

AGC-5240 / ACP 5240 + RDS (option)

FRONT PANNEL

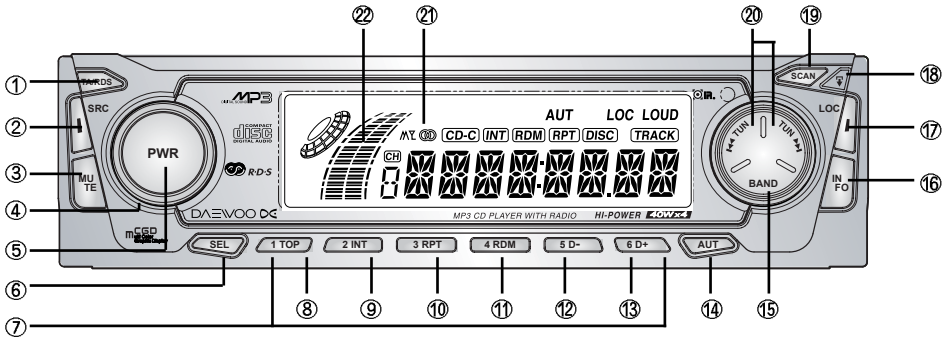

① TA / RDS Control Button
② Source Selector (Radio, Aux, CD)
③ Audio Mute Selector
④ Audio (Volume) Control
⑤ Power ON/OFF Button
⑥ Push Select Control Button
Bass,Treble, (Loudness),
DSP, Balance, Fader

⑦ Station Preset Memory Buttons
⑧ Track One Position (TOP)
⑨ Track Introduction Scan (INT)
⑩ Repeat Play (RPT)
⑪ Random Play (RDM)
⑫ Folder Down Button

⑬ Folder Up Button
⑭ Auto Store Tuning
⑮ AM/FM Band Selector
⑯ Information Display
(Time, Frequency, PTY)
⑰ LOCAL Button

⑱ Front Panel Release Button
⑲ Station Scan Button
⑳ Tune/Seek Button
(Disc Track Up/Down Button)
(MP3 File Up/Down Button)
(Cue/Review Function Button)
㉑ FM Mono/ST Operation
㉒ Volume/Audio Level Meter

L.C.Display

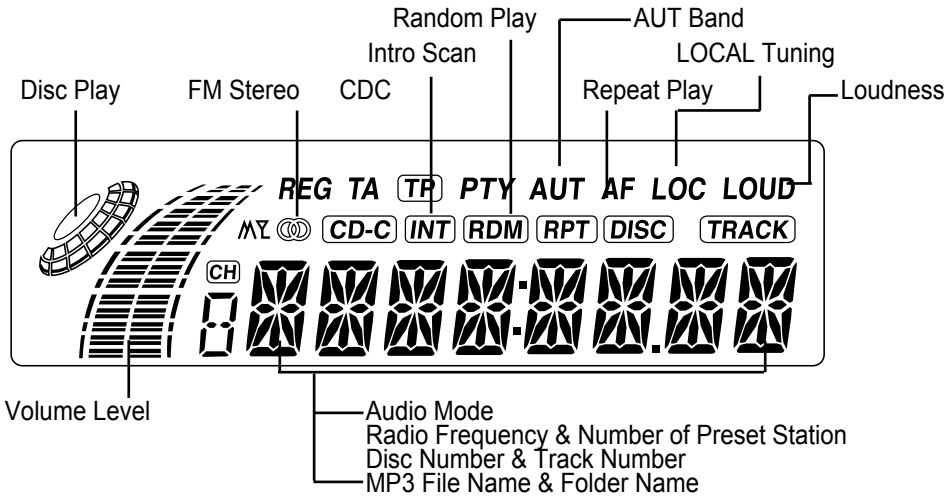

AGC-5260 / ACP 5260 + RDS (option)

FRONT PANNEL

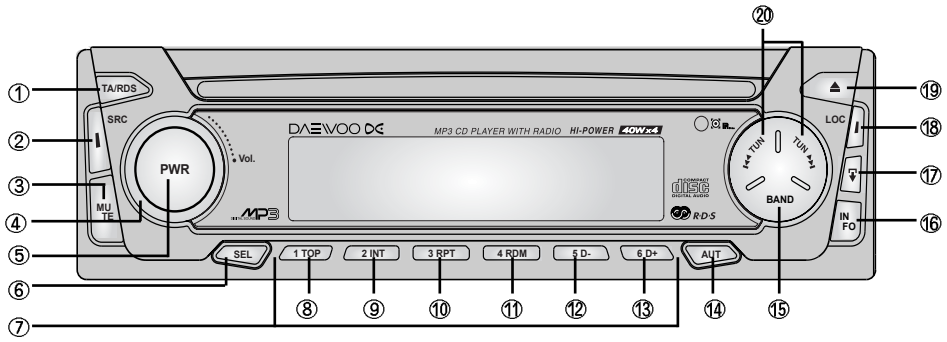

① TA / RDS Control Button
② Source Selector (Radio, Aux, CD)
③ Audio Mute Selector
④ Audio (Volume) Control
⑤ Power ON/OFF Button
⑥ Push Select Control Button
Bass,Treble, (Loudness),
DSP, Balance, Fader

⑦ Station Preset Memory Buttons
⑧ Track One Position (TOP)
⑨ Track Introduction Scan (INT)
⑩ Repeat Play (RPT)
⑪ Random Play (RDM)
⑫ Folder Down Button

⑬ Folder Up Button
⑭ Auto Store Tuning
⑮ Station Scan Button
⑯ Information Display
(Time, Frequency, PTY)
⑰ Front Panel Release Button

⑱ LOCAL Button
⑲ CD Eject Button
⑳ Tune/Seek Button
(Disc Track Up/Down Button)
(MP3 File Up/Down Button)
(Cue/Review Function Button)

L.C.Display

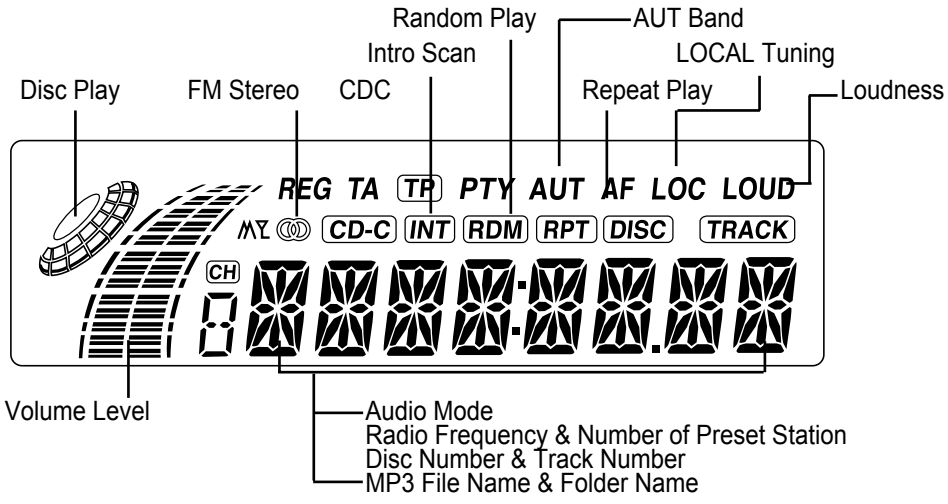

AGC-5280 / ACP 5280 + RDS (option)

FRONT PANNEL

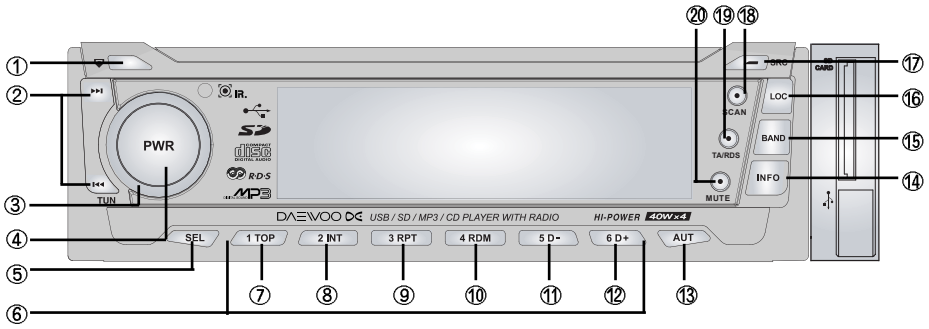

■ 리모콘 **(AXR-519R)**

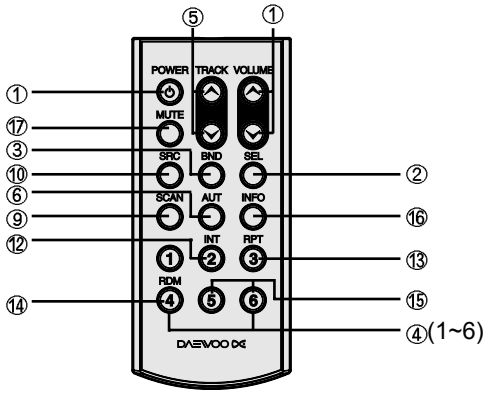

① Front Panel Release Button
② Tune/Seek Button
(Disc Track Up/Down Button)
(MP3 File Up/Down Button)
(Cue/Review Function Button)
③ Audio (Volume) Control
④ Power ON/OFF Button
⑤ Push Select Control Button
Bass,Treble, (Loudness),
DSP, Balance, Fader
⑥ Station Preset Memory Buttons
⑦ Track One Position (TOP)
⑧ Track Introduction Scan (INT)
⑨ Repeat Play (RPT)
⑩ Random Play (RDM)
⑪ Folder Down Button
⑫ Folder Up Button
⑬ Auto Store Tuning
⑭ Information Display
(Time, Frequency, PTY)
⑮ AM/FM Band Selector
⑯ LOCAL Button
⑰ Source Selector
(Radio, SD Card, USB, Aux, CD)
⑱ Station Scan Button
⑲ TA / RDS Control Button
⑳ Audio Mute Selector

L.C.Display

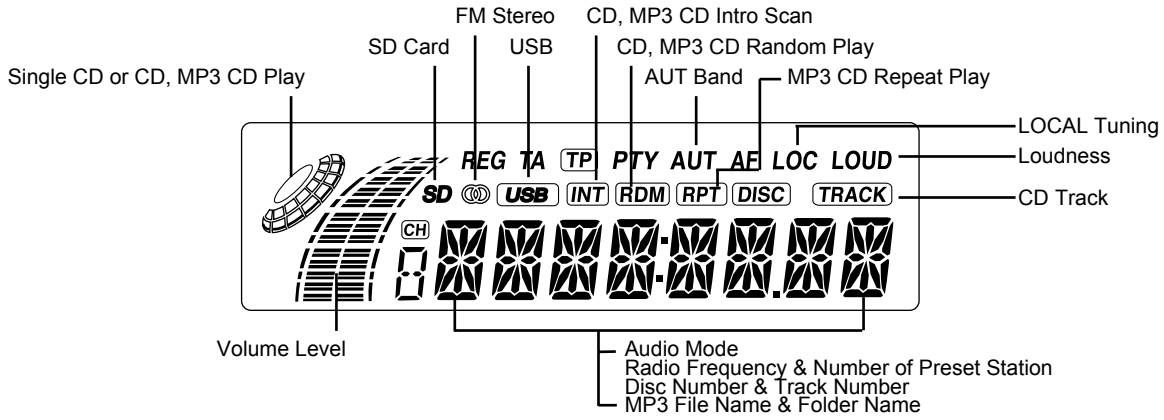

4. Standard Test Report

The Condition of Standard Measurement

1-1. SCOPE

This standard specification is applied to radio receiver with MP3 Player receiver named AGC-5200/20/40/60/80 that is designed an produced by DAEWOO ELECTRONICS CO., LTD.

1-2. PURPOSE

The purpose of this specification standardizes of specification for car audio units and increase the efficiency of business and improves the quality of design and production.

1-3. DETAILS

1-3-1. FEATURES

A. This unit is single din MP3 PLAYER

B. Mechanical and eletronic part is newly designed and major key parts are as follows.

1) OUTPUT : 4X40W (EIAJ)

2) BAND : 3-BAND (FM 18MEMORY, MW 12MEMORY, LW 6MEMORY)

3) AUDIO CONTROL : ELECTRONIC VOLUME CONTROL (VOLUME, BASS, TREBLE, BALANCE,FADER)

4) DECK MECHANISM : KOMEC DECK

5) TUNER : KWANG SUNG

6) AUX (option)

7) OPTION :RDS

1-3-2. UNIT SPECIFICATION

1) NAME: AGC-5200/20/40/60/80

2) CHARACTERISTIC

- BLACK MASK LCD
- AMBER COLOR ILLUMINATION
- KOMEC DECK MECHANISM
- CD-DA(CD-TEXT), MP3 readable
- PRESET(FM:18, MW:12, LW:6)
- PRESET SCAN/AUTO MEMORY
- BAND DIMMER ON/OFF CONTROL
- 4X40W (MAX.)
- FRONT PANEL DETACHABLE/FLIPDOWN
- ALL FUNCTION REMOCON

3) DIMESIONS(mm)

- BODY : 188(W) X 58(H) X 166.5(D)
- ESCUTCHEON : 188(W) X 58(H) X 10(D)
- WEIGHT : 1.448Kg

4) GENERAL

- OPERATING VOLTAGE : DC 10.5 - 16V
- MAX OUTPUT (FM 45KHz DEVIATION) : 40W/CH
- MW : 522kHz - 1620kHz 9kHz STEP
- FM : 87.5 MHz - 108 MHz 50kHz STEP
- LW : 144KHz - 288KHz

5) AUDIO SECTION

- RADIO OUT POWER : 18W X4 CHANNEL INTO 4 ohm (1kHz 10% THD)
- LOAD IMPEDANCE : 4ohm PER EACH CHANNEL (4 ohm X 4)

6) FM SECTION

- TUNING RANGE : 87.5 MHz - 108 MHz
- IF FREQUENCY : 10.7 MHz
- S/N : 50dB

7) MW SECTION

- TUNING RANGE : MW :522 kHz - 1620 kHz
- IF FREQUENCY : 10.7MHz
- S/N : 40dB

8) LW SECTION

- TUNING RANGE : 144KHz - 288KHz
- IF FREQUENCY : 10.7MHz
- S/N : 40dB

9) ISO 16P CONNECTION (A,B PART)

"A" PART : POWER SUPPLY PART , TELEPHOLE IN (A1), DIMMER

"B" PART : SPEAKER CONNECTION

1-3-3. MEASUREMENT CONDITIONS & GENERAL SPECIFICATION

1-3-3-1. MEASUREMENT CONDITIONS

■ The measurement condition of FM radio part

1) State of control part of receiver (When available)

-LOUD ---------- OFF

-LOCAL/DX SWITCH ----- DX

-MUTE SWITCH ---------- OFF

-MONO / STEREO ---------- MONO except stereo mode.

2) Standard measurement input signal

Carrier wave frequency

- Makes 90.1MHz, 98.1MHz, 106.1MHz as a standard and considers the channel space for the digital tuning radio and selects the nearest frequency from the specified frequency.
- If there is an outside interference, it's possible to move it to the nearest frequency.
- Reference carrier wave strenth : 1mV(60dBuV)

Modulation

- MONO : 1KHz 30% (22.5KHz DEV.)
- STEREO : 1KHz 60% (45KHz DEV.) / L+R=45%, L-R=45%, PILOT =10%
- RDS(OPTION) : MPX=40%(L+R=15%,L-R=15%, PILOT=10%) RDS(57KHz)= 2.66% (±1.2KHz) DK (125Hz) : 30% AM / BK : 60% AM
- Pre-emphasis : Set as 50uS when needed to measure FM audio response.

3) SSG matching pad

4) Receiver tuning : Indicated frequency of receiver and carrier wave frequency should be matched.

■ Measurement condition of AM radio part

1) Standard measurement input signal

Carrier wave frequency

- Makes 603KHz, 999KHz, 1404KHz as a standard and considers the channel space for the digital tuning radio and selects the nearest frequency from the specified frequency.
- If there is an outside interference, it's possible to move it to the nearest frequency.
- Standard LW band test frequencies are 160KHz, 220KHz, 280KHz and considers the channel space for the digital tuning radio and selects the nearest frequency from the specified frequency.
- If there is an outside interference, it's possible to move it to the nearest frequency.
- Reference carrier wave strenth : 5mV(74dBuV)

Modulation : Standard modulation : 400Hz, 30%

2) SSG matching pad

1-4. REFERENCE CONDITION

1-4-1. STANDARD POWER SOURCE : 14.4 V

1-4-2. OPERATING VOLTAGE : 10.5 ~ 16 V

1-4-3. LOAD IMPEDANCE : 4 OHM PER EACH CHANNEL (4 OHM *4)

1-4-4. STANDARD OUTPUT : 1 W

1-5. SUB RULE

This specification is applied from 03.04.2005

5. ELECTRICAL SPECIFICATION

RADIO - FM SECTION

NO	PERFORMANCE		**POSITION**	UNIT	**NOMINAL**	LIMIT
1	TUNING RANGE		MIN	MHz	87.5	87.5
			MAX	MHz	108.0	108.0
2	CHANNEL SPACE		ALL	KHz	50	50
3	INTERMEDIATE FREQUENCY		ALL	MHz	10.7	10.7 ± 0.3
4	USABLE SENSITIVITY		90.1 MHz	dBμ	10	≤ 18
	(S/N = 30dB)		98.1 MHz	dBμ	10	≤ 18
			106.1 MHz	dBμ	10	≤ 18
5	IMAGE REJECTION RATIO		98.1 MHz	dB	70	≥ 40
6	IF REJECTION RATIO		98.1 MHz	dB	90	≥ 50
7	LIMITING SENSITIVITY (-3dB)		98.1 MHz	dB	11	12 ± 8
8	AM SUPPRESSION (AM 30%)		98.1MHz	dB	45	≥ 30
9	S/N RATIO		90.1 MHz	dB	52	≥ 45
	(60) dB INPUT		98.1 MHz	dB	52	≥ 45
			106.1MHz	dB	52	≥ 45
10	T.H.D	22.5KHz	98.1MHz	%	0.3	≤ 3
	(60) dB INPUT	75KHz	98.1MHz	%	0.4	≤ 3.5
11	AUDIO	LOW	100 Hz	dB	0	0 ± 5
	FIDELITY	HIGH	10 KHz	dB	-3	-3 ± 5
12	STEREO ON SENSITIVITY		98.1MHz	dBμ	15	≤ 20
13	CHANNEL 1KHz/60dBu	L-->R		dB	30	≥ 20
	SEPARATION	R-->L		dB	30	≥ 20
	1KHz/40dBu	L-->R		dB	10	≤ 20
		R-->L		dB	10	≤ 20
14	SEARCH STOP LEVEL		98.1 MHz	dBμ	20	20 ± 10
15	LOCAL SEARCH STOP LEVEL		98.1 MHz	dB	25	20 ± 10
16			MHz	dBμ		
17			MHz	mV		
18	PI SEEK LEVEL		98.5MHz	dBμ		≤ 35
19	AF SEARCH LEVEL		98.1MHz	dBμ		≤ 35
20	TA POWER(98.1M,45K,60dBu)		98.1MHz	mV		200mVrms
21	TP INDICATOR ON LEVEL		98.1MHz	dBμ		≤ 35

RADIO - AM SECTION

NO	PERFORMANCE	**POSITION**	UNIT	**NOMINAL**	LIMIT
1	TUNING RANGE	MIN	KHz	522	522
		MAX	KHz	1620	1620
2	CHANNEL SPACE	KHz	KHz	9	9
3	MANUAL	-	KHz	9	9
4	INTERMEDIATE FREQUENCY	ALL	KHz	450	450
5	USABLE SENSITIVITY	603 KHz	dBμ	23	≤ 35
	(S/N = 20dB)	999 KHz	dBμ	23	≤ 35
		1404 KHz	dBμ	23	≤ 35
6	IMAGE REJECTION RATIO	1404 KHz	dB	100	≥ 40
7	IF REJECTION RATIO	603 KHz	dB	80	≥ 50
8	SELECTIVITY (±9 KHz)	999 KHz	dB	50	≥ 50
9	BAND WIDTH (-6dB)	999 KHz	KHz	4~8	5±4
10	S/N RATIO	603 KHz	dB	50	≥ 40
		999 KHz	dB	50	≥ 40
		1404 KHz	dB	50	≥ 40
11	T.H.D (74dBu) 30% 400Hz	999 KHz	%	0.5	≤ 3
12	AUDIO FIDELITY(-6dB)	999 KHz	Hz	110	≤120
	1KHz 0dBu Ref.(74dBu)		KHz	2.2	≥ 1.4 K
13	SEARCH STOP LEVEL	603 KHz	dBμ	30	30±10
		999 KHz	dBμ	30	30±10
		1404 KHz	dBμ	30	30±10
14	LOCAL SEARCH STOP LEVEL	999 KHz	dB	20	20±10
15	TWEET MODULATION (2*IF)	900 KHz	%	1	≤1

CD SECTION

NO	PERFORMANCE	POSITION	UNIT	NOMINAL	LIMIT
1	FREQUENCY	100Hz	dB	0	0±5
	RESPONSE	10KHz	dB	0	0±3
2	S/N RATIO	1KHz	dB	60	≥50dB
3	T.H.D	127Hz	%	0.5	≤ 1
		1KHz	%	0.2	≤ 1
		10KHz	%	0.5	≤ 1
4	CHANNEL SEPERATION	1KHz	dB		≥40dB
		10KHz	dB		≥35dB
5	DE-EMPHASIS	4KHz	dB		0±3
	-20dB/1KHz ref.	16KHz	dB		0±3
6	CHANNEL BAL 0dB	1KHz	dB	0	0±3

MP3 CD / USB SD SECTION

NO	PERFORMANCE	POSITION	UNIT	NOMINAL	LIMIT
1	FREQUENCY	100Hz	dB	0	0±5
	RESPONSE	10KHz	dB	0	0±3
2	S/N RATIO	1KHz	dB		≥50dB
3	T.H.D	127Hz	%		≤ 1
		1KHz	%		≤ 1
		10KHz	%		≤ 1
4	CHANNEL SEPERATION	1KHz	dB		≥40
		10KHz	dB		≥35
5	CHANNEL BAL	1KHz	dB		0±3

GENERAL AUDIO SECTION

NO	PERFORMANCE	POSITION	UNIT	NOMINAL	LIMIT
1	OUTPUT POWER(10%THD)	FM 75KHz	W		≥14
	OUTPUT POWER(VOL MAX)	FM 75KHz	W		≥18
2	BALANCE CONTROL EFFECT	L -> R	dB		≥20
		R -> L	dB		≥20
3	FADER CONTROL EFFECT	F -> R	dB		≥40
		R -> F	dB		≥40
4	BASS CONTROL EFFECT	at 100Hz	dB	10	10±3
		at 100Hz	dB	10	10±3
5	TREBLE CONTROL EFFECT	at 10KHz	dB	9	10±3
		at 10KHz	dB	9	10±3
6	LOUD EFFECT	at 100Hz	dB		0±5
		at 10KHz	dB		EVR 0
6	LINE-OUT LEVEL	FM 45KHz	V		0.8±0.2
7	LEVEL BALANCE				
	FM : 45KHz dev. / 60dBu		dB		Ref
	AM : 30% mod. / 74dBu		dB		-5±3 dB
	CD : TCD-782 1KHz		dB		10±3 dB
	MP3 : SCD-4419 1KHz		dB		10±3 dB
	USB : SCD-4419 1KHz		dB		10±3 dB
	SD : SCD-4419 1KHz		dB		10±3 dB
	AUX : 45KHz dev. / 60dBu		dB		10±3 dB
8	NOISE LEVEL	(FM) VR MIN	mV		≤ 2 mVrms
		(CD) VR MIN	mV		≤ 2 mVrms

6 . TROUBLE SHOOTING GUIDE

■ AGC-5200,5220,5240,5260,5280 ■ ACP-5200,5220,5240,5260,5280

1. General Funtion

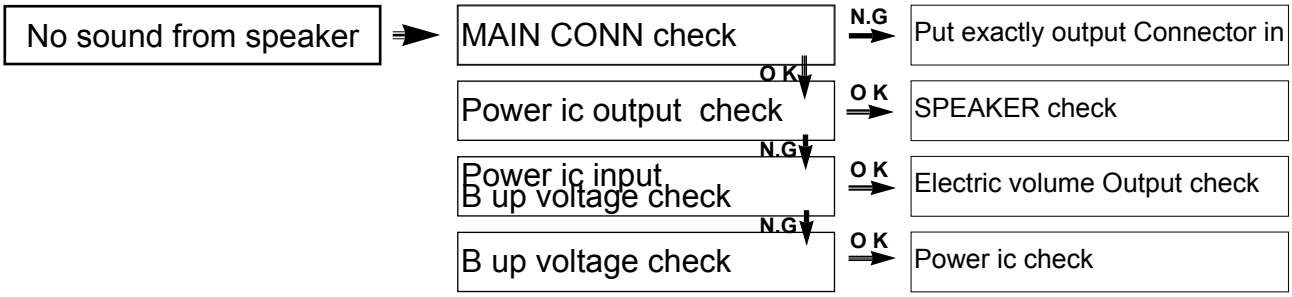

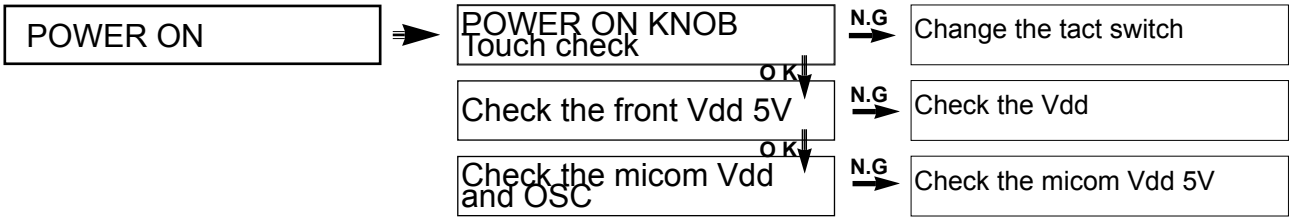

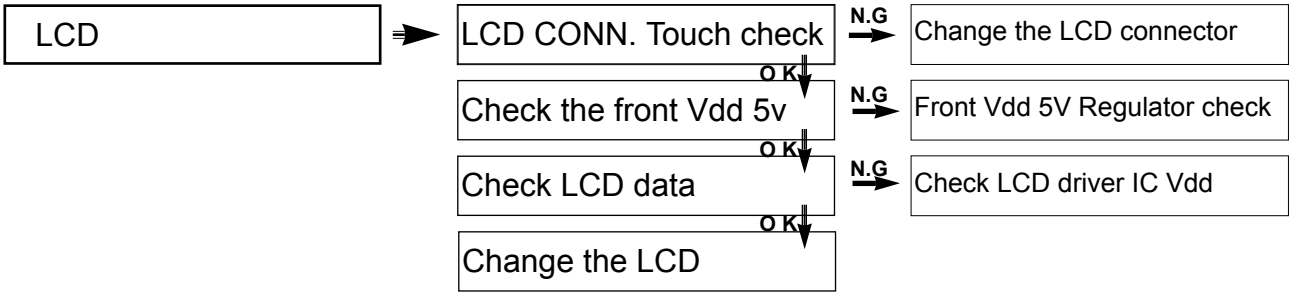

2. Deck Funtion

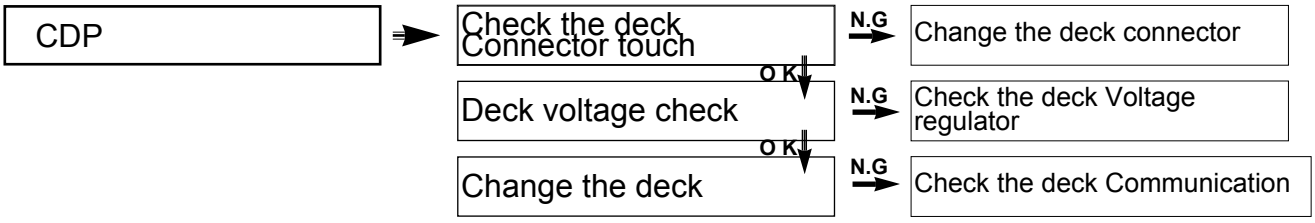

3. USB / SD Function

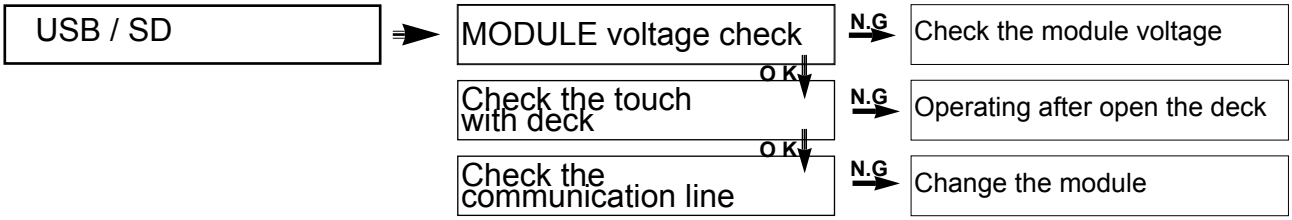

7. FUNCTION OF MICOM IC

■ AGC-5200,5220,5240,5260,5280 ■ ACP-5200,5220,5240,5260,5280

IC (S3C831B) PIN

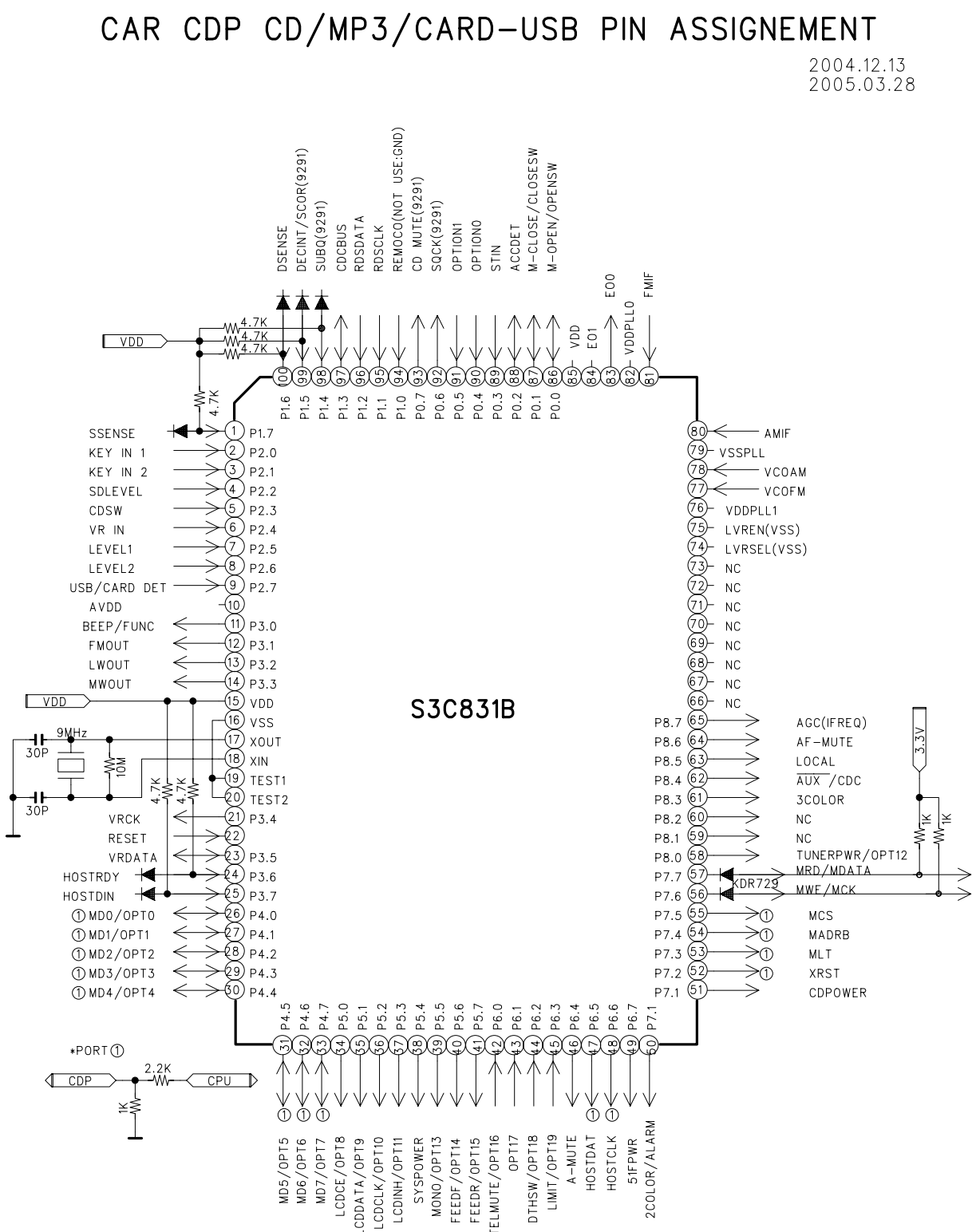

ASSIGNMENT (Car-CDP)				2005.3.28			SAMSUNG S3C831B(QFP)
PIN	PORT NAME	PIN NAME	F U N C T I O N	Active	I/O Type	when not used	R E M A R K
2	P2.0/AD0	KEYIN1	A/D KEY IN1		A/D in,p/	p/u to VDD	p/up(4.7k) on main PCB to VDD
3	P2.1/AD1	KEYIN2/FRDET	A/D KEY IN2		A/D in,p/	p/u to VDD	p/up(4.7k) on front PCB to VDD
5	P2.3/AD3	CDSW	CD Switch in (LD/EJ/CL)		A/D in,p/	GND	
6	P2.4/AD4	VRIN	Encoder volume in		A/D in,p/	Pull down(1M)	
7	P2.5/AD5	LEVEL	Level dance input		A/D in,p/	GND	
8	P2.6/AD6				A/D in,p/	GND	
9	P2.7/AD7	USBIN	USB/CARD in detect switch input		A/D in,p/	GND	USB:1.6V/CARD:3.1V/ETC:2.1V
10	AVDD						
11	P3.0/BUZ	BEEP/FUNC	1. Buzzer out 2.FUNC port high by "Mode" key & Option "EN FUNC" selected	H	O	open	SUB WOOFER
12	P3.1/SCK0	FMOUT	Switching FM and MW/LW H=FM, L=MW/LW	H	O	open	
13	P3.2/SO0	LWOUT	Switching LW and MW/FM L=LW, H=MW/FM	L	O	open	
14	P3.3/SI0	LWMWOUT	Switching LW/MW and FM H=MW/LW, L=FM	H	O	open	
15	VDD						
16	VSS						
17	Xout	XOUT					
18	Xin	XIN	9MHz				
19	TEST1					Vss	
20	TEST2					Vss	
21	P3.4/SCK1	VRCK	VR Clock out	H/L	O	open	open-drain/ext. P/U resistor(2.2k) to switched 5V
22	RESET						
23	P3.5/SO1	VRDA	VR DATA out	H/L	I/O	open	open-drain/ext. P/U resistor(2.2k) to switched 5V
24	P3.6/SI1	HOSTRDY	Memory card decoder 51F data ready		I		
25	P3.7	HOSTDIN	Memory card decoder 51F data in		I		
26	P4.0/SEG39	MD0	9279/9370 parallel data		I/O p/p	open	OPT0
27	P4.1/SEG38	MD1					OPT1
28	P4.2/SEG37	MD2					OPT2
29	P4.3/SEG36	MD3					OPT3
30	P4.4/SEG35	MD4					OPT4
31	P4.5/SEG34	MD5			I/O p/p	open	OPT5
32	P4.6/SEG33	MD6					OPT6
33	P4.7/SEG32	MD7					OPT7
34	P5.0/SEG31	FRONTCLK	LCD LC75824 CLOCK	H/L	O p/p		OPT8
35	P5.1/SEG30	FRONTDO	LCD LC75824 DATA	H			OPT9
36	P5.2/SEG29	FRONTCE	LCD LC75824 CE	H			OPT10
37	P5.3/SEG28	FRONTDI	LCD LC75824 DI	H/L			OPT11
38	P5.4/SEG27	SYSPOWER	System Power Out	H	O p/p		!! No Option Diode Port
39	P5.5/SEG26	MONO	H is output when MONO mode is selected(Radio)	H			OPT13
40	P5.6/SEG25	FEEDF	CDP loading motor forward	H	in p/u		OPT14
41	P5.7/SEG24	FEEDR	CDP loading motor reverse	H			OPT15
42	P6.0/SEG23	TELMUTE	Telephone Mute input				OPT16
43	P6.1/SEG22						OPT17
44	P6.2/SEG21	DTHSW	Front detach detection				OPT18
45	P6.3/SEG20	LIMIT	CD Limit switch in	L			OPT19
46	P6.4/SEG19	MUTE	Main mute for power IC	H	O p/p		
47	P6.5/SEG18	HOSTDAT	Memory card decoder 51F data out	H/L			
48	P6.6/SEG17	HOSTCLK	Memory card decoder 51F clock out	H/L			
49	P6.7/SEG16	51FPOWER	Memory card decoder 51F power out	H			
50	P7.0/SEG15	2COL/ALARM	1. 2 color control 2. LED blinking when front panel is disconnected.	H L			
51	P7.1/SEG14	CDPOWER	H is output when CD mode is selected or loading/ejecting CD disc.	H			
52	P7.2/SEG13	XRST	CDP DSP/SSP Reset	L			
53	P7.3/SEG12	MLT	MLT 9226				
54	P7.4/SEG11	MADRB	MADDR 9279		O p/p		
55	P7.5/SEG10	MCS	CE 9279				
56	P7.6/SEG9	MWE/MCK	MWE 9279, MCK 9226				
57	P7.7/SEG8	MRD/MDATA	MRD 9279, MDATA 9226				
58	P8.0/SEG7						OPT12
59	P8.1/SEG6						
60	P8.2/SEG5						
61	P8.3/SEG4	3COLOR	3 color control with 2COL/ALARM	H			
62	P8.4/SEG3	AUX/CDC	H is output when AUX/CDC mode is selected.	H			

63	P8.5/SEG2	LOCAL	H is output when LOCAL seek mode is selected(Radio).	H	O p/p		
64	P8.6/SEG1	AFMUTE	RDS AF mute output	H			
65	P8.7/SEG0	IFREQ	IF request	H			
66	COM3						
67	COM2						
68	COM1						
69	COM0						
70	VLC2						
71	VLC1						
72	VLC0						
73	BIAS						
74	LVRSEL						
75	LVREN						
76	VDDPLL1						
77	VCOFM						
78	VCOAM						
79	VSSPLL						
80	AMIF						
81	FMIF						
82	VDDPLL0						
83	EO0						
84	EO1						
85	CE						
86	P0.0				I/O	open	
87	P0.1/T0CLK				I/O	open	
88	P0.2/T0CAP	ACCDET	1. ACC on detection input 2. Loading optical sens LED power		I/O	open	L=ACC OFF
89	P0.3/T0OUT	STIN	Stereo signal input		I/O	open	
90	P0.4/T1CLK	OPTIN0	Option Diode check input 1	L	in p/u		
91	P0.5/T1OUT	OPTIN1	Option Diode check input 2	L	in p/u		
92	P0.6/T2CLK	SQCK	CDP SUBQ data clock 9291				
93	P0.7/T2OUT	CDMUTE	CD MUTE 9291				
94	P1.0/INT0	REMOCON	Remote control input			GND	remote control receiver power off during ACC off
95	P1.1/INT1	RDSCLK	RDS clock input		I	GND	
96	P1.2/INT2	RDSDATA	RDS data input		I	open	
97	P1.3/INT3	CDCBUS	CD Changer commucation BUS input		i p/u/O	Pull down(1M)	
98	P1.4/INT4	SUBQ	CDP SUBQ data 9291	H/L	in p/x		
99	P1.5/INT5	DINT/SCOR	DECINT 9279/SCOR 9291		in p/u	GND	
100	P1.6/INT6	DSENSE	ISTAT 9279/9291		in p/u		
1	P1.7/INT7	SSENSE	ISTAT 9226		in p/u		

Electronic Volume IC (TDA7313/PT2313)		
Mode	Pin name	Pin number
FM	Stereo 2	10,14
MW/LW	Stereo 2	10,14
Tape/S-CDP/HOST	Stereo 3	9,13
Aux/CDC	Stereo 1	11,15

8. IC BLOCK DIAGRAM

IC (PT2313L) : 4-Channel Audio Processor

Princeton Technology Corp.
Tel: 886-2-66296288
Fax: 886-2-29174598
URL: http://www.princeton.com.tw

4 Channel Audio Processor **PT2313L**

BLOCK DIAGRAM

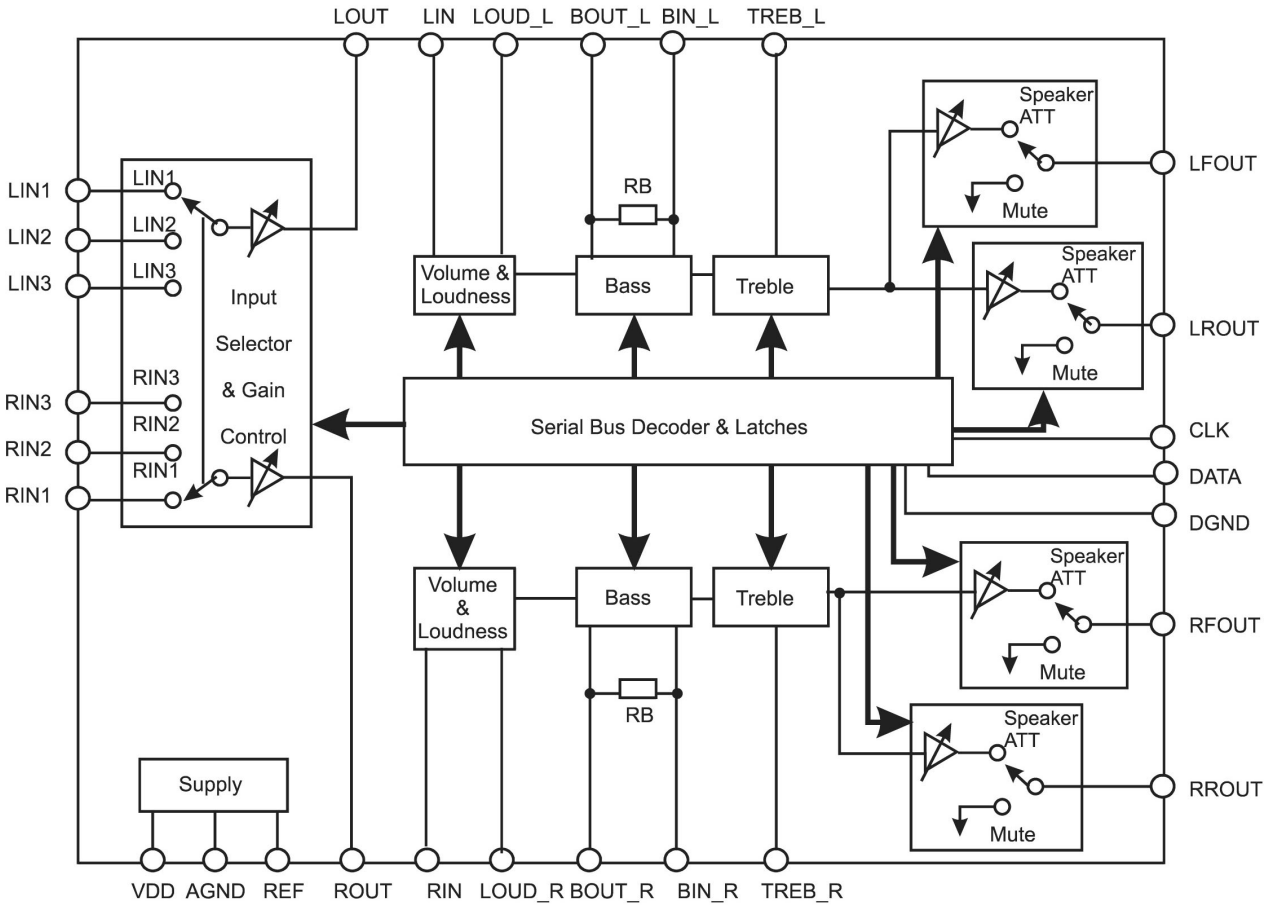

Note: PT2313L (20-pin version) does not provide LOUDNESS Function (LOUD_L/LOUD_R) and Tone Control (TREB_L/TREB_R, BIN_L/BIN_R, BOUT_L/BOUT_R).

IC (PT6524) : LCD Driver

Princeton Technology Corp.
Tel: 886-2-66296288
Fax: 886-2-29174598
URL: http://www.princeton.com.tw

LCD Driver IC **PT6524**

PIN CONFIGURATION

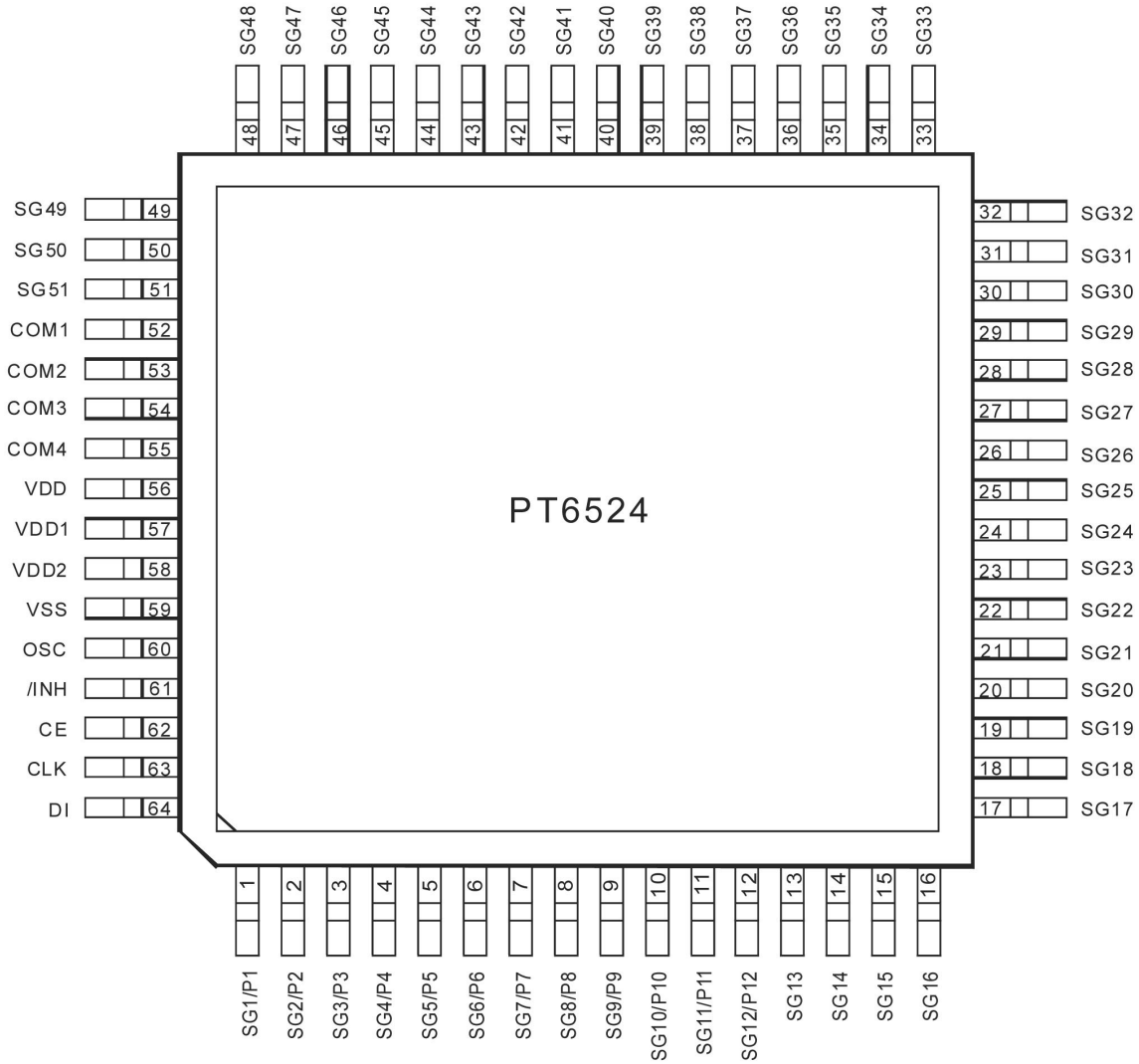

IC (TDA8571J) : Power Amplifier

BLOCK DIAGRAM

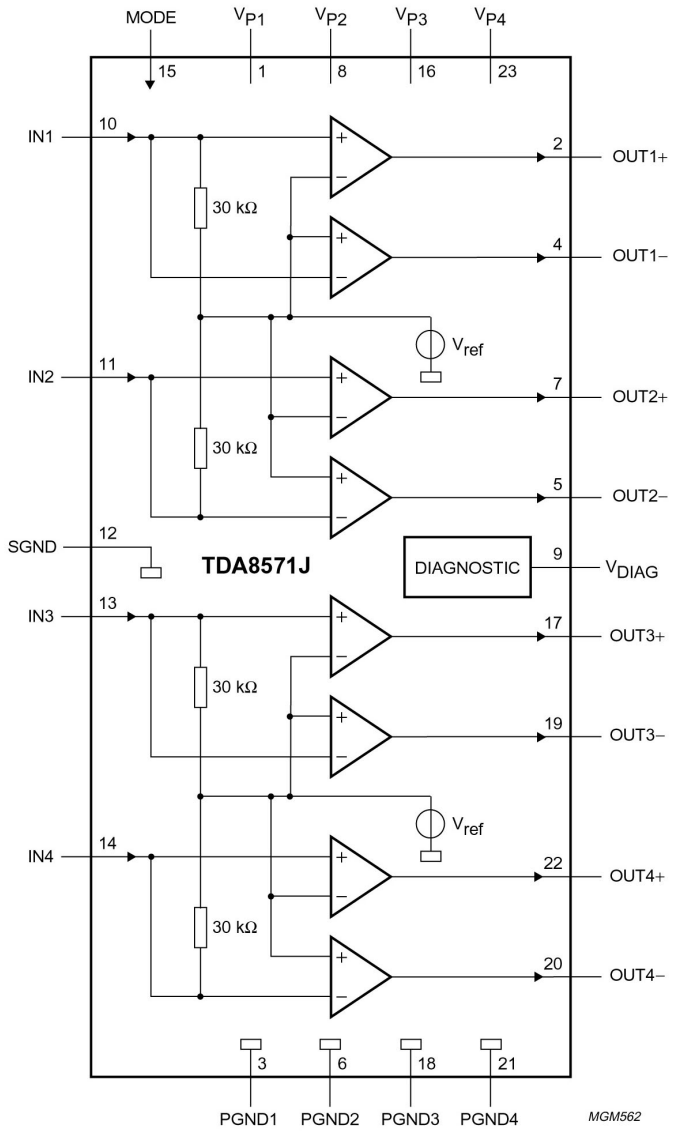

Fig.1 Block diagram.

9. PARTS LOCATION ON P.C.BOARD

AGC-5200 / ACP 5200 + RDS (option)

Front Bottom

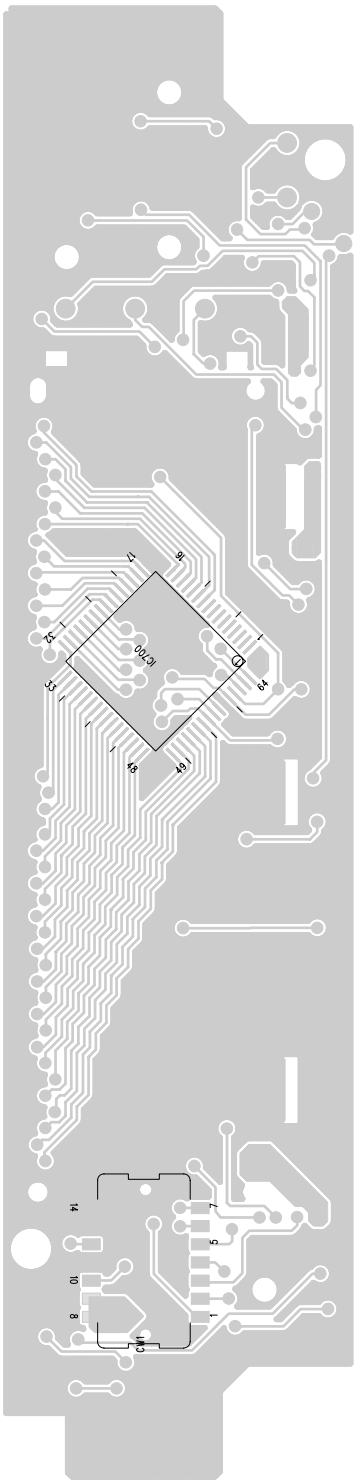

Front Top

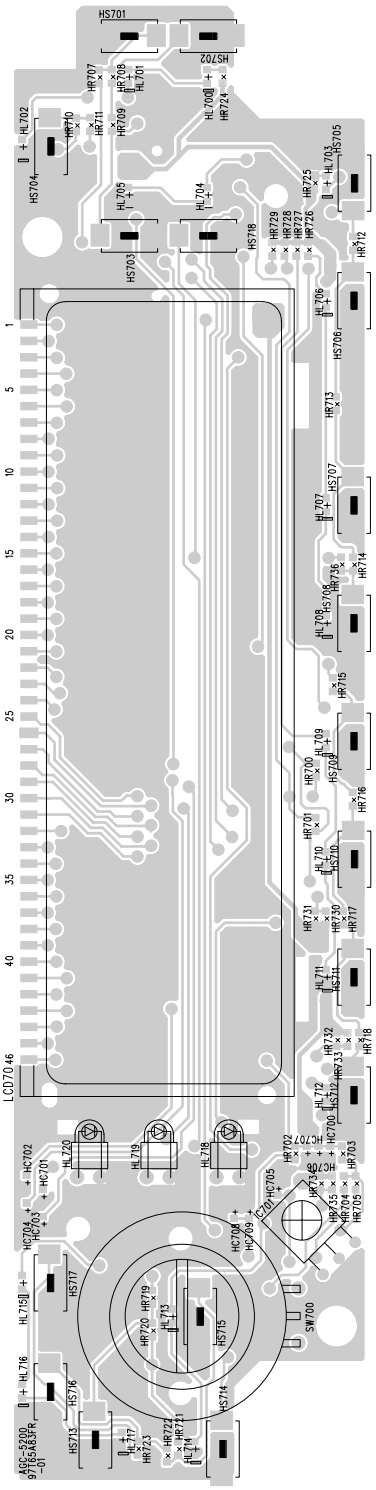

AGC-5220 / ACP 5220 + RDS (option)

Front Bottom

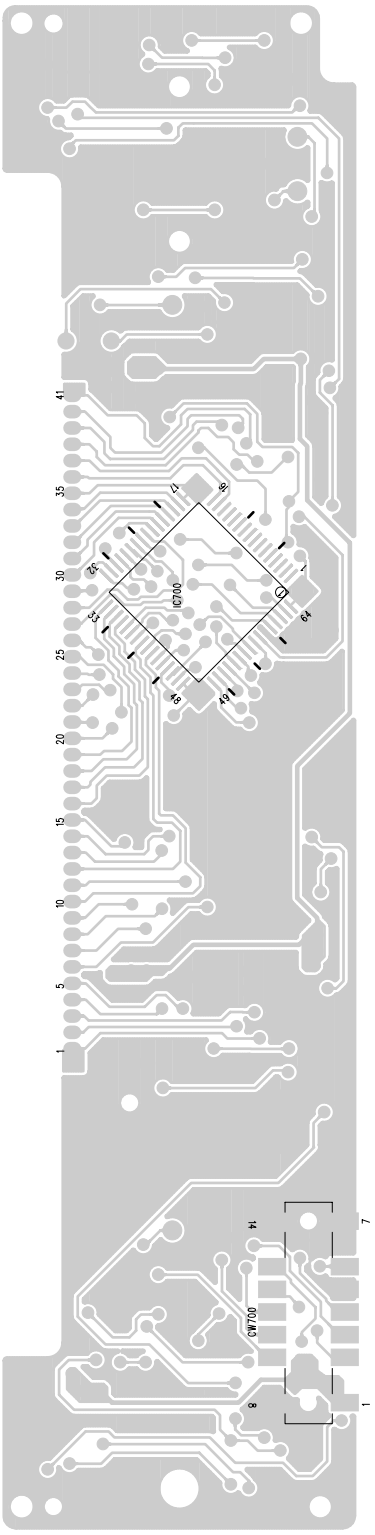

Front Top

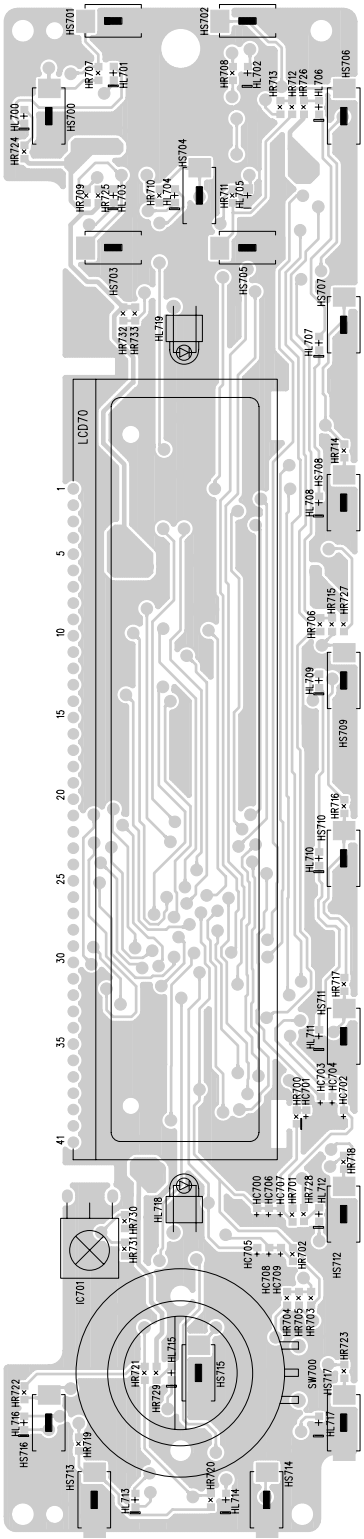

AGC-5240 / ACP 5240 + RDS (option)

Front Bottom

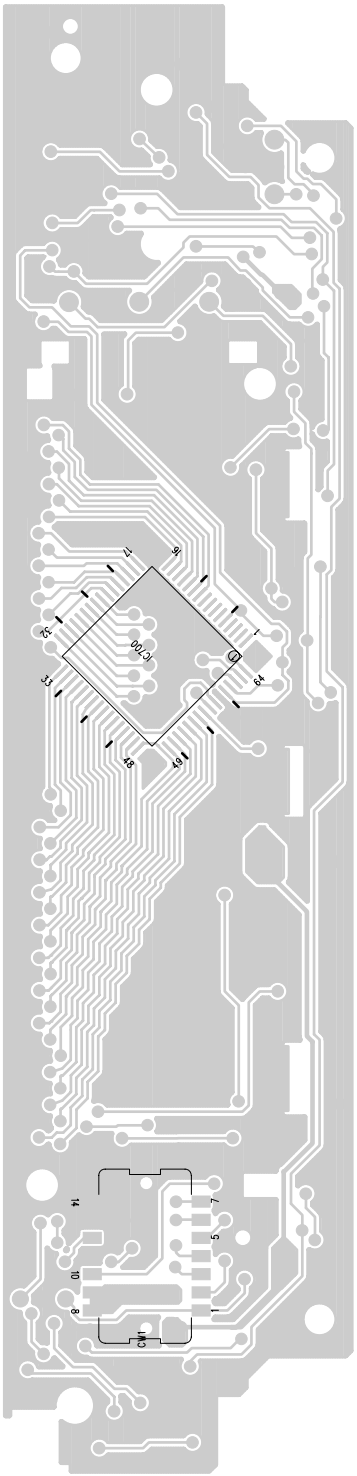

Front Top

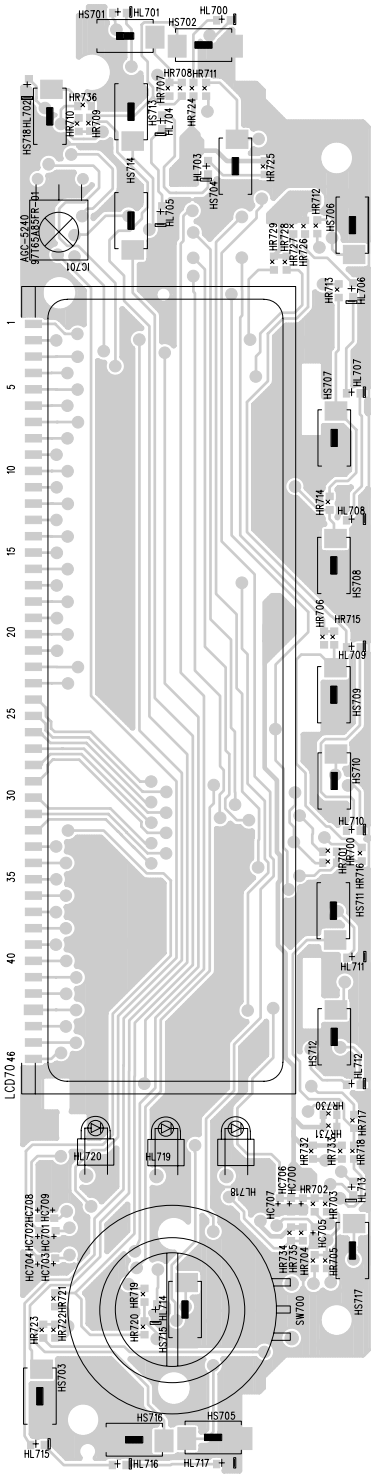

AGC-5260 / ACP 5260 + RDS (option)

Front Bottom

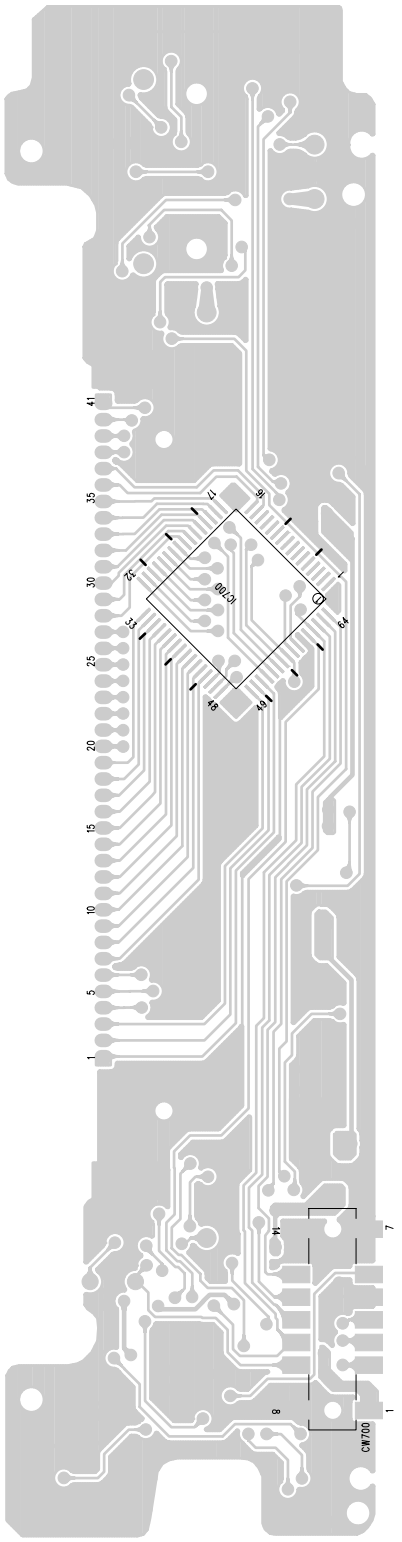

Front Top

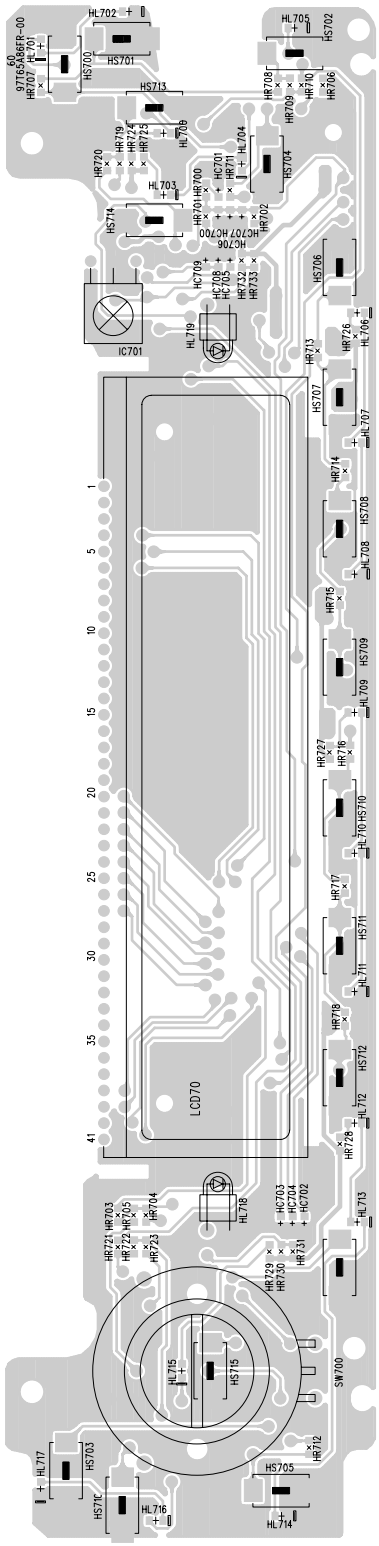

AGC-5280 / ACP 5280 + RDS (option)

Front Bottom

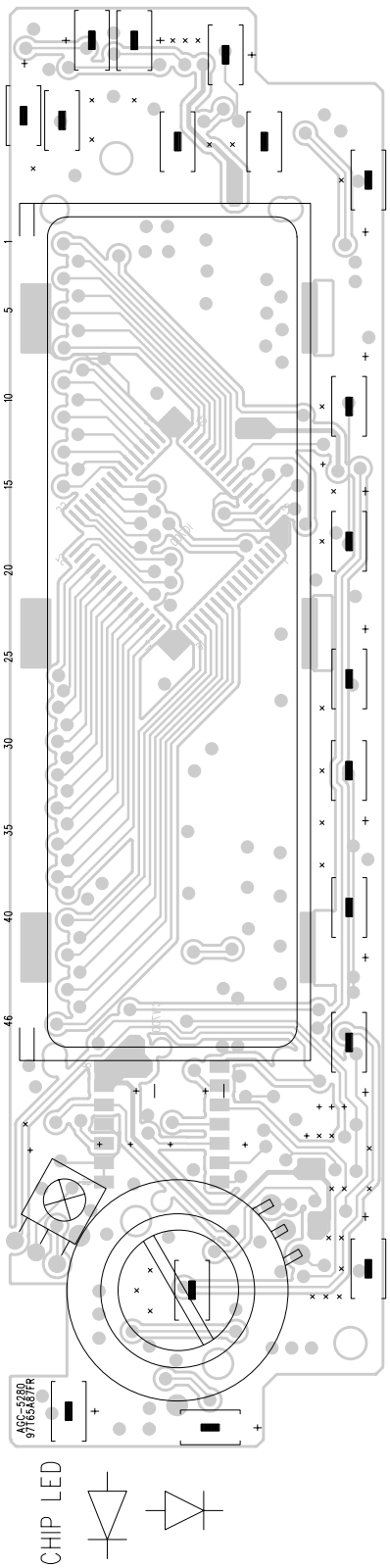

Front Top

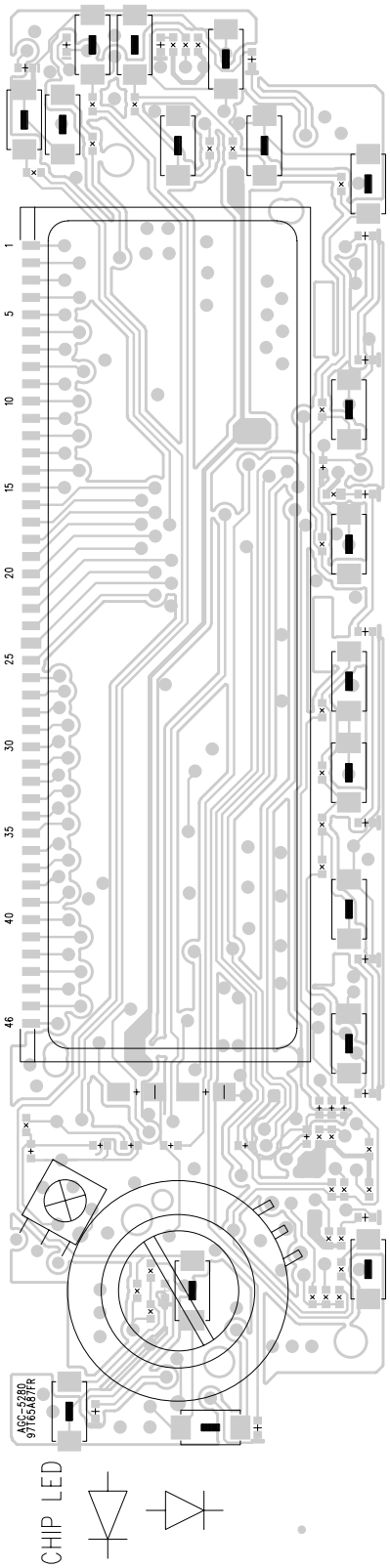

■ AGC-5280

Memory Bottom

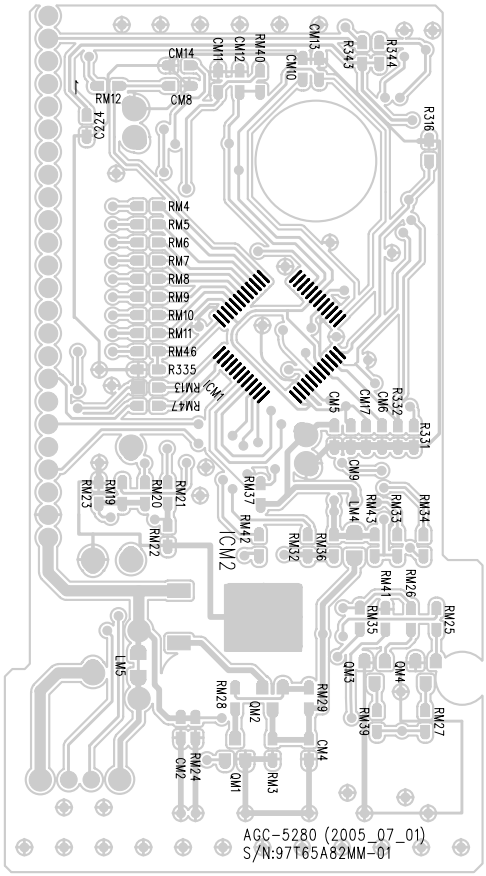

Memory Top

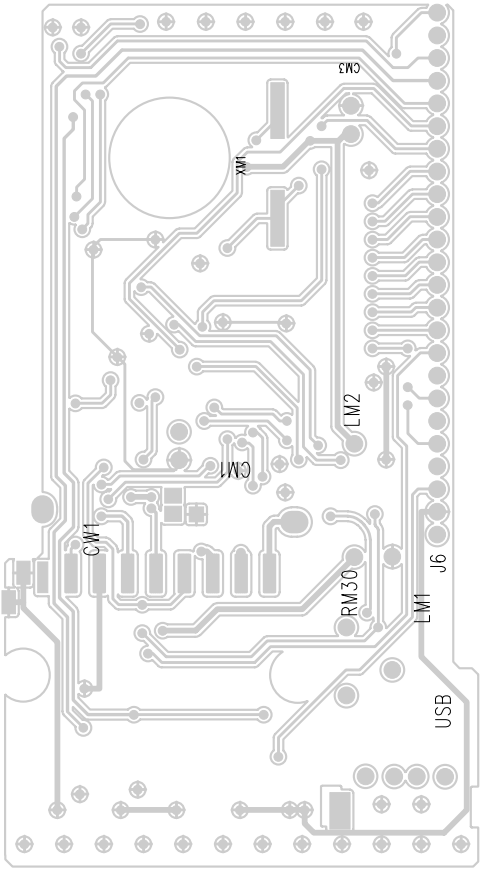

■ AGC-5200,5220,5240,5260 ■ ACP-5200,5220,5240,5260

Main Bottom

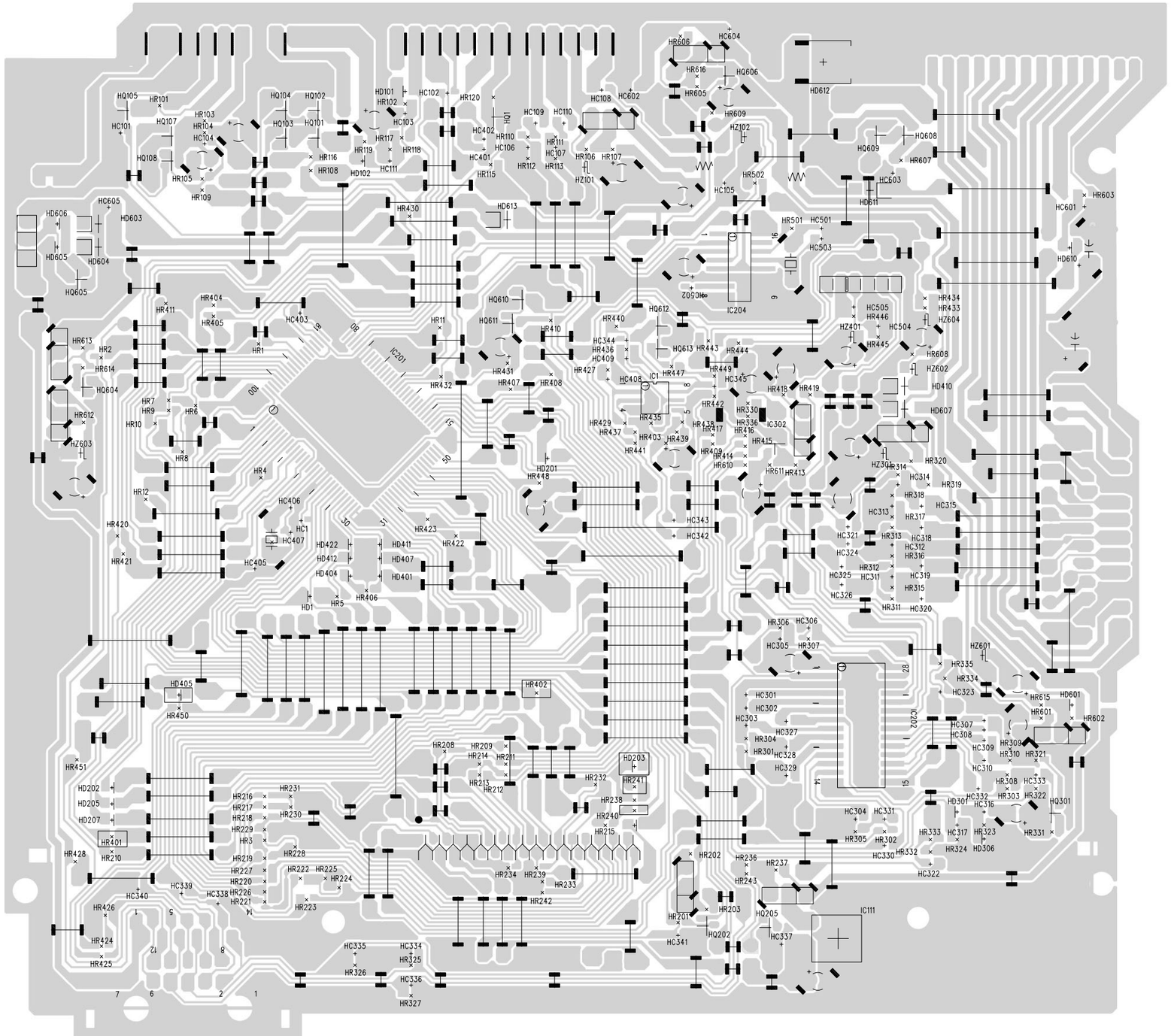

■ AGC-5200,5220,5240,5260 ■ ACP-5200,5220,5240,5260

Main Top

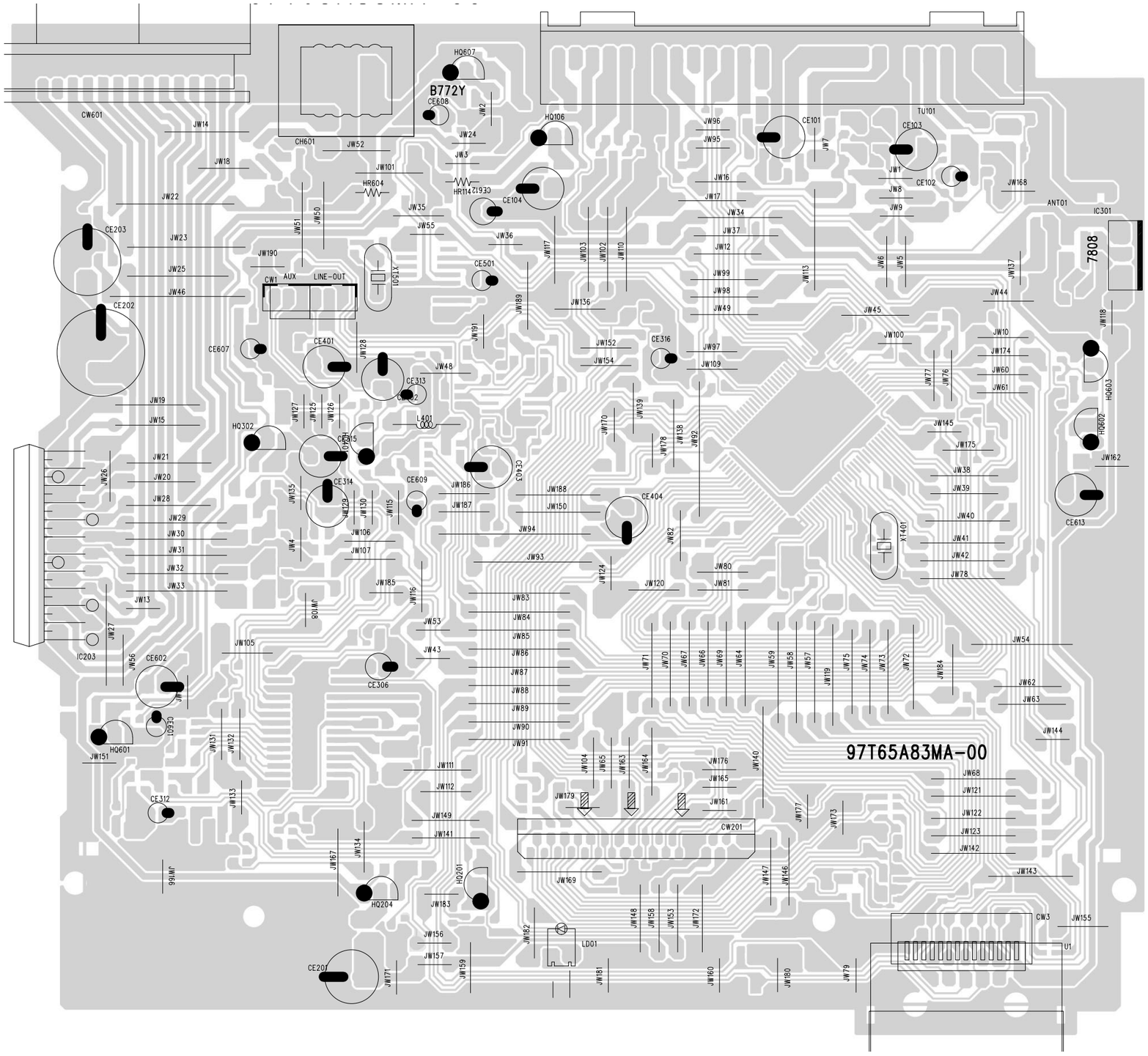

■ **AGC-5280**

Main Bottom

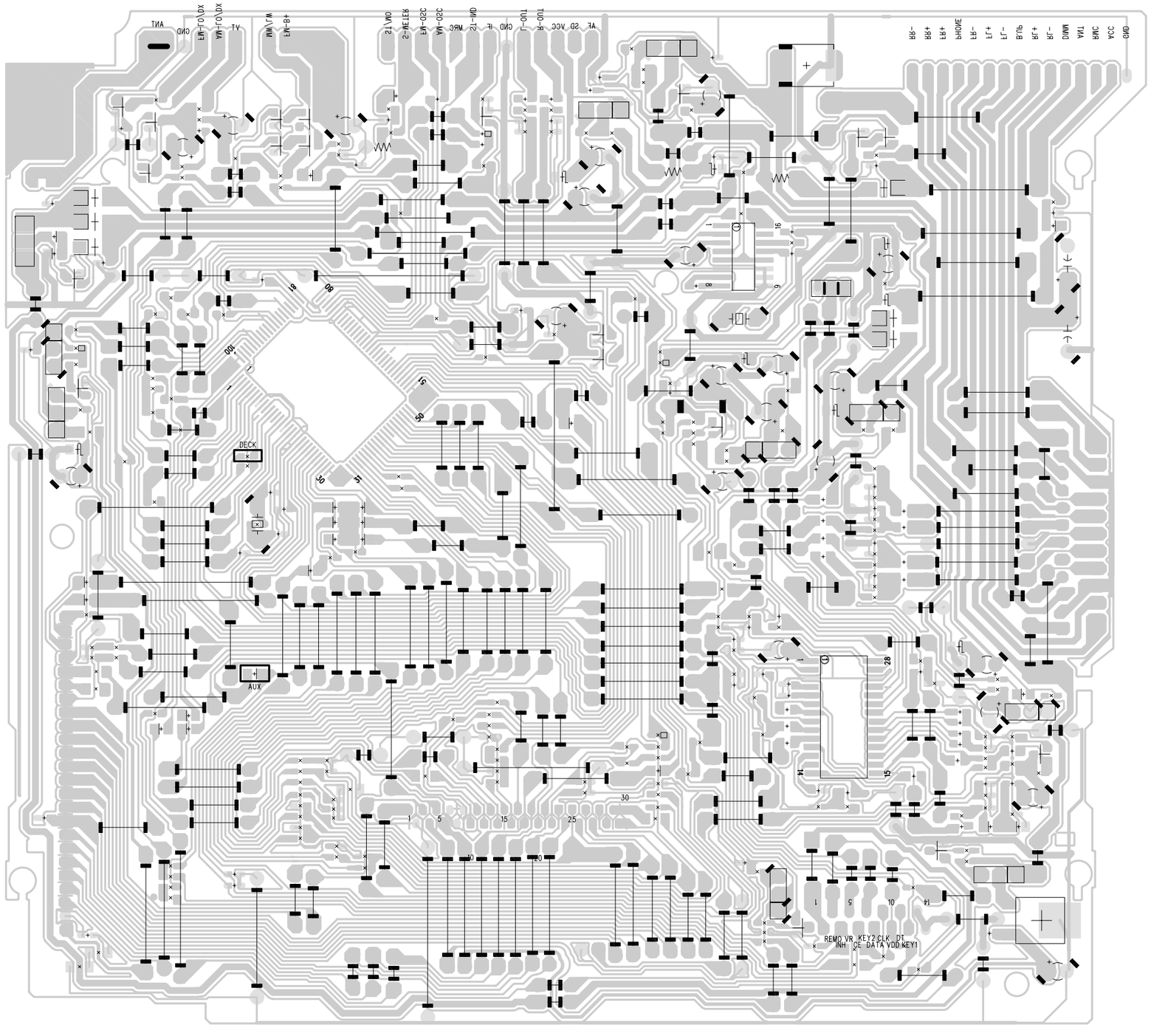

■ **AGC-5280**

Main Top

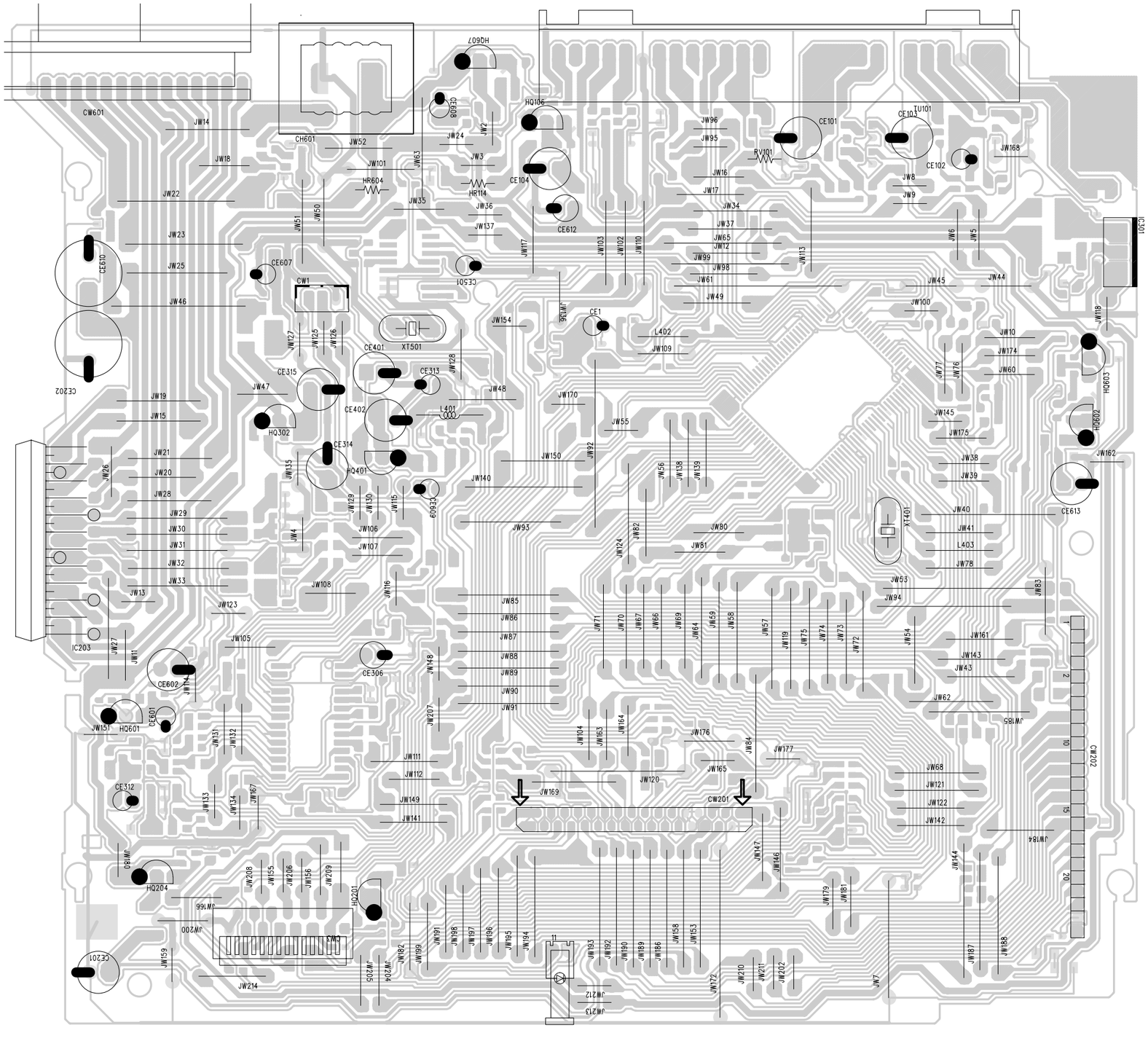

10. BLOCK & SCHEMATIC Diagram

■ AGC-5200,5220,5240,5260,5280 ■ ACP-5200,5220,5240,5260,5280

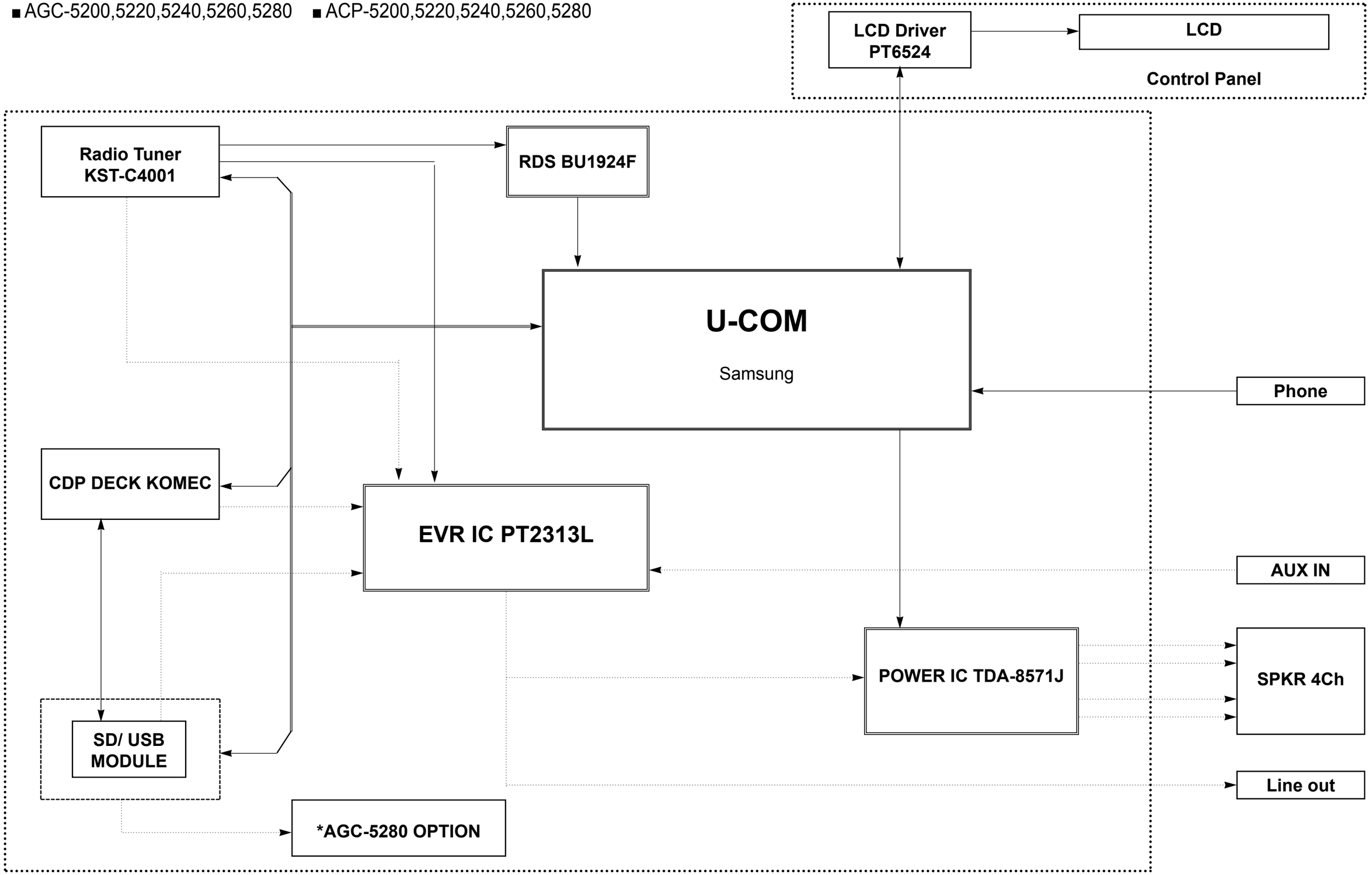

SCHEMATIC Diagram of Main

- ACP-5200,5220,5240,5260,5280
- AGC-5200,5220,5240,5260,5280
- ACP-5200,5220,5240,5260,5280 with RDS
- AGC-5200,5220,5240,5260,5280 with RDS

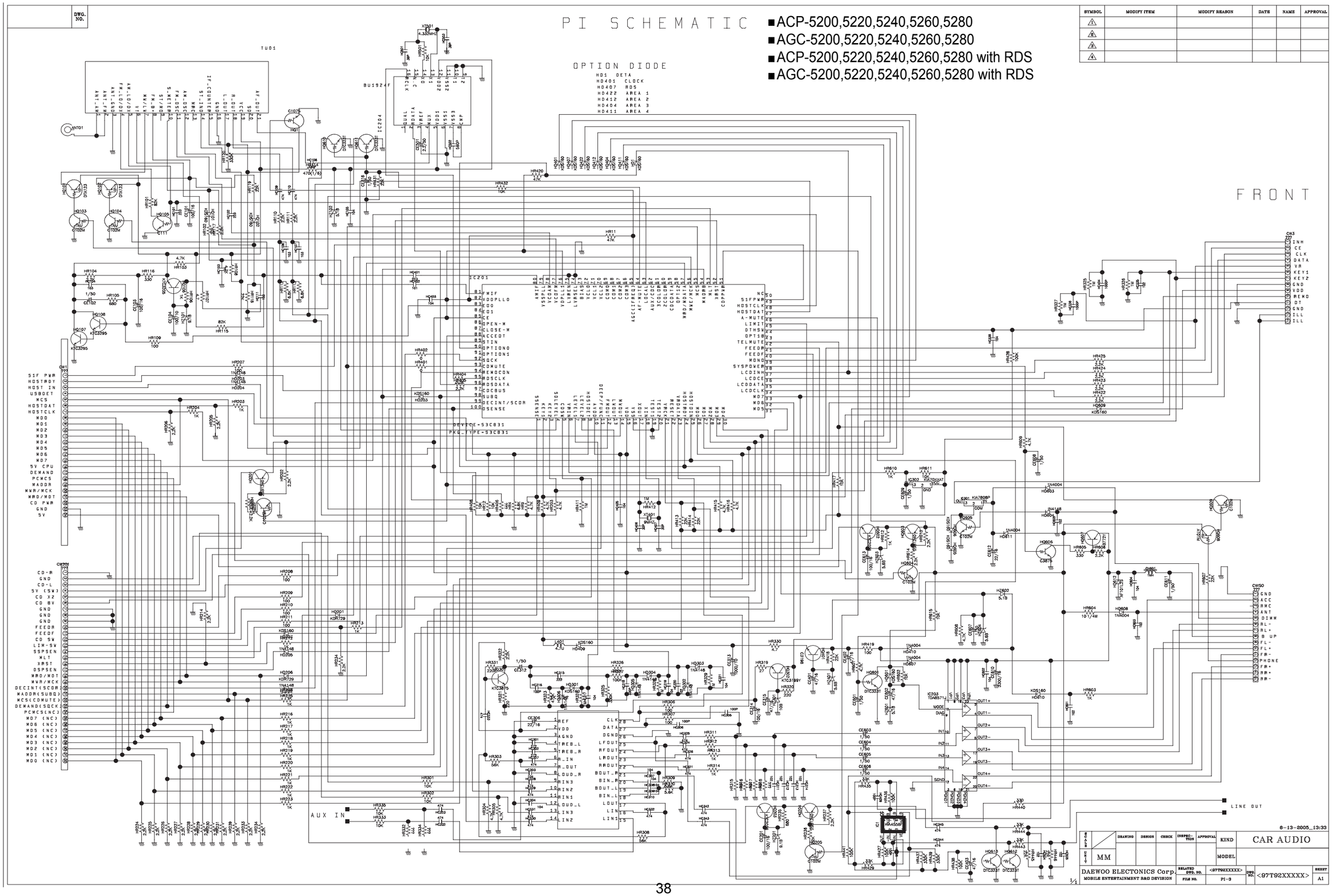

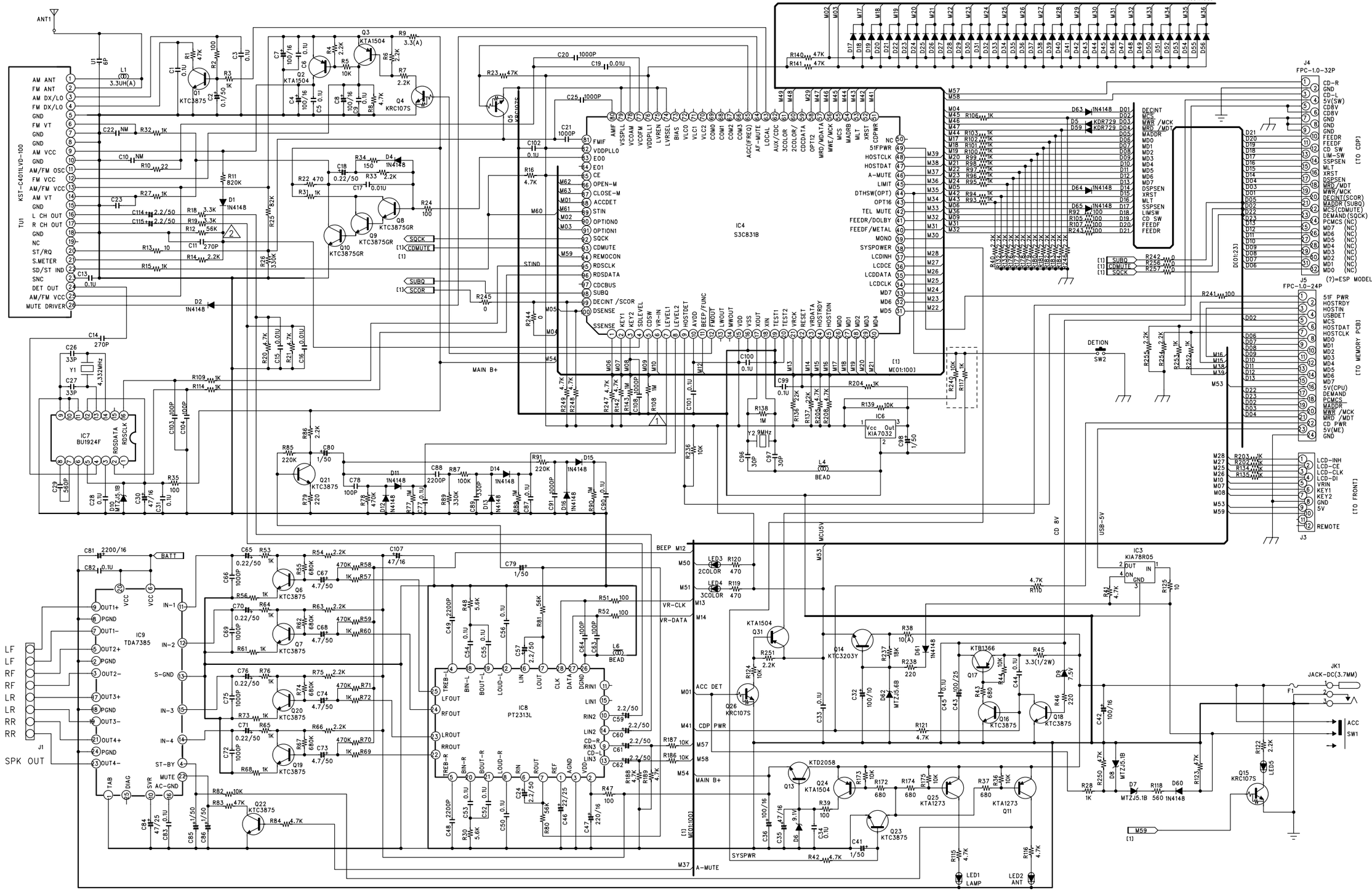
ANT1
TU1 KST-C401ILVD-100
AM ANT
FM ANT
AM DX/LO
FM DX/LO
FM VT
AM VCC
AM/FM OSC
AM/FM VCC
AM VT
L CH OUT
R CH OUT
ST/RQ
S.METER
SD/ST IND
SNC
DET OUT
MUTE DRIVER
IC4 S3C831B
IC7 BU1924F
IC8 PT2313L
IC9 TDA7385
IC6 KIA7032
IC3 KIA78R05
MAIN B+
BATT
SYSPWR
CD 8V
USB-5V
MCU5V
J1 SPK OUT
J3 REMOTE
J4 FPC-1.0-32P
J5 FPC-1.0-24P
[TO CDP]
[TO MEMORY PCB]
[TO FRONT]
JK1 JACK-DC(3.7MM)
SW1 ACC
SW2 DETION
LED1 LAMP
LED2 ANT
LED3 2COLOR
LED4 3COLOR
LED5
BEEP
VR-CLK
VR-DATA
A-MUTE
ACC DET
CDP PWR
SUBQ
SQCK
CDMUTE
SCOR
DECINT
MCS
MWR /MCK
MRD /MDT
MADDR
CD SW
LIMSW
DSPSEN
XRST
MLT
SSPSEN
FEEDR
FEEDF
DEMAND(SCK)
PCMCS (NC)
DCI(01:23)
(?)=ESP MODEL
LCD-INH
LCD-CE
LCD-CLK
LCD-DI
VRIN
KEY1
KEY2
REMOTE
M[01:100]

11.PARTS LIST

PCB MAIN AS PNMAMBNI19 AGC-5200, 5240RD-AS

	NAME	CODE	Description	Q'ty	Location
1	IC AUDIO	1BU1924F--	BU1924(SOP)	1 EA	IC204
2	IC RESET	1K1A7032AT	KIA7032AT/TSM	1 EA	IC302
3	IC CHIP REGULATOR	1K1A7808AF	KIA7808AF DPARK	1 EA	IC111
4	IC REGULATOR	1K1A7808P1	KIA7808API	1 EA	IC301
5	IC AUDIO	1PT2313L--	PT2313L	1 EA	IC202
6	IC CHIP CUSTOM	1S3P831B00	S3P831 BXZZ-QXRB	1 EA	IC201
7	IC POWER	1TDA8571J-	TDA8571J-Y	1 EA	IC203
8	COIL CHOKE	5LC301PA18	37X1X5.2 300UH P EI-19MM	1 EA	CH601
9	COIL INDUCTOR	5LL479K03K	4.7UH K 03 TA 26MM	1 EA	L401
10	CRYSTAL QUARTZ	5XJZ4R332D	HC-49/S 4.332MHZ 25PPM F	1 EA	XT501
11	CRYSTAL QUARTZ	5XJZ9R000D	HC-49S 9MHZ 30PPM	1 EA	XT401
12	CONN WAFER	97T6245700	FCZ100E-32RS-K	1 EA	CW201
13	CONN WAFER	97T6245900	12511HR 14P 1.25MM ANGLE	1 EA	CW3
14	PCB MAIN	97T65A83MA	330X190X1.6T/2 FR-1	1 EA	B0001
15	JACK ANT	97T6802500	9.5X20X27.5	1 EA	ANT01
16	TUNER FM/AM	97T7612800	KST-M4001LVO-10	1 EA	TU101
17	CONN AS	97T8865000	E3P 100M/M	1 EA	CW1
18	C ELECTRO	CEYE1C332E	SD 16V 3300MF (13X25)	1 EA	CE202
19	DIODE CHIP	DKDR729--U	KDR729-USC	2 EA	HD201 HD206
20	DIODE CHIP	DKDS160--B	KDS160-UF	10 EA	HD101 HD202 HD205 HD207 HD301 HD306 HD601 HD605 HD606 HD610
21	LED	DLT4H11G41	LT4H11G-41(RED)	1 EA	LD01
22	DIODE CHIP	DRF101L2SB	RF101L2S	6 EA	HD410 HD603 HD604 HD607 HD611 HD613
23	DIODE RECTIFER CHIP	DS3DD0214D	3A SMD RECTIFER	1 EA	HD612
24	DIODE CHIP ZENER	DZKDZ100V-	KDZ 10V USC	1 EA	HZ301
25	DIODE CHIP ZENER	DZKDZ5R1V-	KDZ5.1V USC	3 EA	HZ102 HZ601 HZ602
26	DIODE CHIP ZENER	DZKDZ5R6V-	KDZ5.6V USC	2 EA	HZ401 HZ604
27	DIODE CHIP ZENER	DZKDZ9R1V-	KDZ9.1V USC	1 EA	HZ101
28	MAIN CHIP AS DON	N5MC01712P	KOR-1712	1 EA	00MC1
29	PCB MAIN AS AUTO CHIP	PNMAJCNI19	AGC-5240RD-AS	1 EA	10002
30	PCB MAIN AS AUTO	PNMAJMNI19	AGC-5240RD-AS	1 EA	10001
31	TR CHIP	TDTA123JKA	DTA123JKA (E32)	2 EA	HQ101 HQ102
32	TR CHIP	TDTC323TKB	DTC323TK	2 EA	HQ610 HQ611
33	TR CHIP	TKRA101S-B	KRA101S	1 EA	HQ608
34	TR CHIP	TKRC102S-B	KRC102S	6 EA	HQ103 HQ104 HQ202 HQ205 HQ605 HQ609
35	TR CHIP	TKRC107S-B	KRC107S SOT-23 NU	1 EA	HQ1
36	TR CHIP	TKRC111S-B	KRC111S	1 EA	HQ105
37	TR TKSB772Y--	KSB772Y		1 EA	HQ607
38	TR CHIP	TKTC3295B-	KTC3295B RTK	2 EA	HQ107 HQ108
39	TR CHIP	TKTC3875YB	KTC3875Y SOT-23 ALY	2 EA	HQ301 HQ606
40	TR	TZ2SB1240R	2SB1240R	1 EA	HQ204
41	TR	TZDTC323TS	DTC323TSA SPT	1 EA	HQ601
42	TR	TZTC3198Y-	KTC3198Y-(1815Y) (AUTO)	1 EA	HQ401
43	TR	TZTC3199Y-	KTC-3199Y TAPING	1 EA	HQ302
44	TR	TZTC3205Y-	KTC3205Y (2236Y)	1 EA	HQ106

FRONT DETA AS PNFDCANI01 AGC-5200RD

	NAME	CODE	Description	Q'ty	Location
1	IC DRIVER	1PT6524---	PT6524--- QFP	1 EA	IC700
2	SW TACT	5S52643CL2	1C-1P SKMA 10918A 260G	18 EA	HS701 HS702 HS703 HS704 HS705 HS706 HS707 HS708 HS709 HS710 HS711 HS712 HS713 HS714 HS715 HS716 HS717 HS718
3	ENCODER VOLUME	5V3503A71A	EC22B20-ZZZ	1 EA	SW700
4	LCD BLACKMASK	97T0L2150N	91709BMM1TTN	1 EA	LCD70
5	CONN ZEBRA	97T6229600	--	1 EA	0F050
6	CONN-FLIP(PLUG)	97T6235000	FPP1444X	1 EA	CW1
7	PCB FRONT	97T65A83FR	SILVER 164X40X1.6T	1 EA	B002
8	LED	DSB3317G--	SB3317GB-BLUE	1 EA	HL718 HL719 HL720
9	LED CHIP	DSY1216C--	SY1216-C	18 EA	HL700 HL701 HL702 HL703 HL704 HL705 HL706 HL707 HL708 HL709 HL710 HL711 HL712 HL713 HL714 HL715 HL716 HL717
10	FR CHIP AS DON	N5FC01156P	KOR-1156	1 EA	00FC1
11	FRONT AS DON	N5FR01157P	KOR-1157	1 EA	00FR1
12	PCB FRONT AS AUTO CHIP	PNFRJCNI00	AGC-5200AD	1 EA	11002
13	PCB FRONT AS	PNFRMBNI01	AGC-5200RD	1 EA	11001

ESCUTCHEON AS PNESCANI00 AGC-5200, 5240RD-AS

	NAME	CODE	Description	Q'ty	Location
1	SW TACT	5S52625MP1	TP1140B	1 EA	SW701
2	PLATE PCB	97T0929500	PC	1 EA	0D010
3	CONNECTOR	97T6234900	FPS1442X(SOKET)	1 EA	CWFR
4	PCB ESC	97T65A88ES	160X118XT1.6/3	1 EA	B0004
5	LAMP PILOT	97T82L6F95	9V 50MA D3.0 C3RDHT0031 EA	PL701	
6	CONN AS	97T8879500	FFC 14P 1.25MM PITCH 50MM	1 EA	CN101
7	ESCUTCHEON AS DON	N5ES00773P	KOR-773	1 EA	00ES1
8	ESC PCB AS	PNESMBNI00	AGC-5200	1 EA	21001

PCB ISO AS PN1SMBJA06 AKD-0225H-AX

	NAME	CODE	Description	Q'ty	Location
1	PCB ISO	97T659661S	160X137.5X1.6/9	1 EA	B006
2	CONN AS	97T8856100	ISO 16P WITH 10A FUSE	1 EA	CW105
3	ISO ASS'Y DON	N51S00115P	KOR-115	1 EA	00IS1

DECK AS PNDKCANI00 AGC-5200, 5240RD-AS

	NAME	CODE	Description	Q'ty	Location
1	IC CHIP DRIVER	1389259ED-	KA9259ED	1 EA	IC5
2	IC REGULATOR SMD	1BA33C18FP	BA33C18FP(3.3V/1.8V)	1 EA	IC6
3	IC SDRAM	1HY57V1616	HY57V1616	1 EA	IC2
4	IC SSP	1S1L9226--	S1L9226	1 EA	IC1
5	IC CHIP DSP	1S5L9279--	S5L9279 DSP+DECODER	1 EA	IC3
6	SWITCH DETECT	97L0S00600	MPU10853MLB4	1 EA	SW1
7	DECK MECHANISM	97T6013200	CDX-200DW	1 EA	DK010
8	CONNECTOR	97T6237600	08-6224-016-001-800	1 EA	CN1
9	CONN WAFER	97T6245500	20010WR-0400	1 EA	CN2
11	CONN WAFER	97T6245700	FCZ100E-32RS-K	1 EA	CN3
12	PCB SERVO	97T65A81SE	247X197X1T/4(MP3)	1 EA	B0001
13	CONN AS	97T8879600	FFC 32P 1MM PITCH 160MM	1 EA	CN102
14	CHIP SOLID INDUCTOR	HLP100D24B	LK2125100K-T 10UH	5 EA	L1 L2 L3 L4 L5
15	CRYSTAL CHIP	HXB16R93ME	SMD 16.9344MHZ 30PPM	1 EA	X1
16	CD DECK AS DON	N5DC01024P	KOR-1024	1 EA	00DC1
17	CD DECK AS DON	N5DK00662P	KOR-662	1 EA	00DK1
18	MP3 DECK AS	PNDKCALQ03	CDX-400F AGC-5200	1 EA	22001
19	MP3 DECK TOTAL AS	PNDTCALQ01	CDX-400F	1 EA	22002
20	PCB SERVO AS AUTO CHIP	PNSVJCLKB3	CDX-400F BOTTOM	1 EA	10003
21	PCB SERVO AS AUTO CHIP	PNSVJCLKT3	CDX-400F TOP	1 EA	10002
22	PCB SERVO AS	PNSVMBLK03	CDX-400F AGC-5200	1 EA	22003
23	TR	TKSB772Y--	KSB772Y	1 EA	Q2
24	TR CHIP	TKTA1505YB	KTA1505-Y	1 EA	Q1

CHASSIS MAIN AS PNCHCANI00 AGC-5200, 5240, 5280

	NAME	CODE	Description	Q'ty	Location
1	COVER BOTTOM	97T0440300	SECC T=0.6	1 EA	CH020
2	COVER TOP	97T0440410	SECC T=0.6 PI	1 EA	CH030
3	CHASSIS MAIN	97T0635200	SECC T=1.0	1 EA	CH010
4	HEAT SINK	97T4412000	DIECASTING(ALDC-12)	1 EA	CH050

PACKING AS PNPKCANI01 AGC-5200, 5240RD-AS

	NAME	CODE	Description	Q'ty	Location
1	CONN AS	97T8858300	"ISO 16P W/PHON,ILL"	1 EA	CN200
2	LABEL CONNECTION	97T9319710	STICKER 3A	1 EA	PK150
3	LABEL BAR CODE	97T9322610	STICKER	1 EA	PK220
4	LABEL CLASSIC	97T93275GD	STICKER	1 EA	PK200
5	MANUAL INSTRUCTION	97T9514500	ART PAPER REF.DES	1 EA	PK160
6	ASSCESSORY AS DON	N5AC00036P	KOR-36	1 EA	00AS1

PCB MAIN AS PNMAMBNI04 AGC-5220, 5260

	NAME	CODE	Description	Q'ty	Location
1	IC AUDIO	1BU1924F--	BU1924(SOP)	1 EA	IC204
2	IC RESET	1K1A7032AT	KIA7032AT/TSM	1 EA	IC302
3	IC CHIP REGULATOR	1K1A7808AF	KIA7808AF DPARK	1 EA	IC111
4	IC REGULATOR	1K1A7808P1	KIA7808API	1 EA	IC301
5	IC AUDIO	1PT2313L--	PT2313L	1 EA	IC202
6	IC CHIP CUSTOM	1S3P831B00	S3P831 BXZZ-QXRB	1 EA	IC201
7	IC POWER	1TDA8571J-	TDA8571J-Y	1 EA	IC203
8	COIL CHOKE	5LC301PA18	37X1X5.2 300UH P EI-19MM	1 EA	CH601
9	COIL INDUCTOR	5LL479K03K	4.7UH K 03 TA 26MM	1 EA	L401
10	CRYSTAL QUARTZ	5XJZ4R332D	HC-49/S 4.332MHZ 25PPM F	1 EA	XT501
11	CRYSTAL QUARTZ	5XJZ9R000D	HC-49S 9MHZ 30PPM	1 EA	XT401
12	CON DETACHABLE(CNDT)	97T62150A0	FP.S-12-3.2-GG	1 EA	U1
13	CONN WAFER	97T6245700	FCZ100E-32RS-K	1 EA	CW201
14	PCB MAIN	97T65A83MA	330X190X1.6T/2 FR-1	1 EA	B0001
15	JACK ANT	97T6802500	9.5X20X27.5	1 EA	ANT01
16	TUNER FM/AM	97T7612800	KST-M4001LVO-10	1 EA	TU101
17	CONN AS	97T8865000	E3P 100M/M	1 EA	CW1
18	DIODE CHIP	DKDR729--U	KDR729-USC	2 EA	HD201 HD206
19	DIODE CHIP	DKDS160--B	KDS160-UF	16 EA	HD1 HD101 HD202 HD205 HD207
					HD301 HD306 HD601 HD605 HD606
					HD610
20	LED	DLT4H11G41	LT4H11G-41(RED)	1 EA	LD01
21	DIODE CHIP	DRF101L2SB	RF101L2S	6 EA	HD410 HD603 HD604 HD607 HD611
					HD613
22	DIODE RECTIFER CHIP	DS3DD0214D	3A SMD RECTIFER	1 EA	HD612
23	DIODE CHIP ZENER	DZKDZ100V-	KDZ 10V USC	1 EA	HZ301
24	DIODE CHIP ZENER	DZKDZ5R1V-	KDZ5.1V USC	3 EA	HZ102 HZ601 HZ602
25	DIODE CHIP ZENER	DZKDZ5R6V-	KDZ5.6V USC	2 EA	HZ401 HZ604
26	DIODE CHIP ZENER	DZKDZ9R1V-	KDZ9.1V USC	1 EA	HZ101
27	MAIN CHIP AS DON	N5MC01712P	KOR-1712	1 EA	00MC1
28	PCB MAIN AS AUTO CHIP	PNMAJCNI04	AGC-5220RT	1 EA	10002
29	PCB MAIN AS AUTO	PNMAJMNI04	AGC-5220RT	1 EA	10001
30	TR CHIP	TDTA123JKA	DTA123JKA (E32)	1 EA	HQ101 HQ102
31	TR CHIP	TDTC323TKB	DTC323TK	1 EA	HQ610 HQ611
32	TR CHIP	TKRA101S-B	KRA101S	1 EA	HQ608
33	TR CHIP	TKRC102S-B	KRC102S	6 EA	HQ103 HQ104 HQ202 HQ205 HQ605
					HQ609
34	TR CHIP	TKRC107S-B	KRC107S SOT-23 NU	1 EA	HQ1
35	TR CHIP	TKRC111S-B	KRC111S	1 EA	HQ105
36	TR	TKSB772Y--	KSB772Y	1 EA	HQ607
37	TR CHIP	TKTC3295B-	KTC3295B RTK	2 EA	HQ107 HQ108
38	TR CHIP	TKTC3875YB	KTC3875Y SOT-23 ALY	2 EA	HQ301 HQ606
39	TR	TZ2SB1240R	2SB1240R	1 EA	HQ204
40	TR	TZDTC323TS	DTC323TSA SPT	1 EA	HQ601
41	TR	TZTC3198Y-	KTC3198Y-(1815Y) (AUTO)	1 EA	HQ401
42	TR	TZTC3199Y-	KTC-3199Y TAPING	1 EA	HQ302
43	TR	TZTC3205Y-	KTC3205Y (2236Y)	1 EA	HQ106

FRONT DETA AS PNFDCANO00 AGC-5220RT

	NAME	CODE	Description	Q'ty	Location
1	IC DRIVER	1PT6524---	PT6524--- QFP	1 EA	IC700
2	SW TACT	5S52643CL2	1C-1P SKMA 10918A 260G	18 EA	HS700 HS701 HS702 HS703 HS704 HS705 HS706 HS707 HS708 HS709 HS710 HS711 HS712 HS713 HS714 HS715 HS716 HS717
3	ENCODER VOLUME	5V3503A71A	EC22B20-ZZZ	1 EA	SW700
4	LCD	97T0L1600P	LS-09058P00	1 EA	LCD70
5	CONN DETACHABLE	97T62150B0	FP.P-14-3.4-GG	1 EA	CW700
6	PCB FRONT	97T65A84FR	SILVER 170X40X1.6T	1 EA	B002
7	LED CHIP	DSY1216C--	SY1216-C	18 EA	HL700 HL701 HL702 HL703 HL704 HL705 HL706 HL707 HL708 HL709 HL710 HL711 HL712 HL713 HL714 HL715 HL716 HL717
8	LED	DSY3317F--	SY3317F	2 EA	HL718 HL719
9	FR CHIP AS DON	N5FC00437P	KOR-437	1 EA	00FC1
10	FRONT AS DON	N5FR01301P	KOR-1301	1 EA	00FR1
11	PCB FRONT AS AUTO CHIP	PNFRJCNO00	AGC-5220RT	1 EA	11002
12	PCB FRONT AS	PNFRMBNO00	AGC-5220RT	1 EA	11001

PCB ISO AS PN1SMBJA06 AKD-0225H-AX

	NAME	CODE	Description	Q'ty	Location
1	PCB ISO	97T659661S	160X137.5X1.6/9	1 EA	B006
2	CONN AS	97T8856100	ISO 16P WITH 10A FUSE	1 EA	CW105
3	ISO ASS'Y DON	N51S00115P	KOR-115	1 EA	00IS1

DECK AS MP3 PNDKCANI03 AGC-5220, 5260

	NAME	CODE	Description	Q'ty	Location
1	IC CHIP DRIVER	1389259ED-	KA9259ED	1 EA	IC5
2	IC REGULATOR SMD	1BA33C18FP	BA33C18FP(3.3V/1.8V)	1 EA	IC6
3	IC SDRAM	1HY57V1616	HY57V1616	1 EA	IC2
4	IC SSP	1S1L9226--	S1L9226	1 EA	IC1
5	IC CHIP DSP	1S5L9279--	S5L9279 DSP+DECODER	1 EA	IC3
6	SWITCH DETECT	97L0S00600	MPU10853MLB4	1 EA	SW1
7	DECK MECHANISM	97T6013200	CDX-200DW	1 EA	DK060
8	CONNECTOR	97T6237600	08-6224-016-001-800	1 EA	CN1
9	CONN WAFER	97T6245500	20010WR-0400	1 EA	CN2
10	CONN WAFER	97T6245600	20010WR-0300	1 EA	CN5
11	CONN WAFER	97T6245700	FCZ100E-32RS-K	1 EA	CN3
12	PCB SERVO	97T65A81SE	247X197X1T/4(MP3)	1 EA	B0001
13	CONN AS	97T8879600	FFC 32P 1MM PITCH 160MM	1 EA	CN102
14	CHIP SOLID INDUCTOR	HLP100D24B	LK2125100K-T 10UH	5 EA	L1 L2 L3 L4 L5
15	CRYSTAL CHIP	HXB16R93ME	SMD 16.9344MHZ 30PPM	1 EA	X1
16	CD DECK AS DON	N5DC01024P	KOR-1024	1 EA	00DC1
17	CD DECK AS DON	N5DK00662P	KOR-662	1 EA	0DK01
18	PCB SERVO AS AUTO CHIP	PNSVJCLKB3	CDX-400F BOTTOM	1 EA	10003
19	PCB SERVO AS AUTO CHIP	PNSVJCLKT3	CDX-400F TOP	1 EA	10002
20	PCB SERVO AS	PNSVMBLK03	CDX-400F AGC-5200	1 EA	22001
21	TR	TKSB772Y--	KSB772Y	1 EA	Q2
22	TR CHIP	TKTA1505YB	KTA1505-Y	1 EA	Q1

CHASSIS MAIN AS PNCHCANI01 AGC-5220

	NAME	CODE	Description	Q'ty	Location
1	COVER BOTTOM	97T0440300	SECC T=0.6	1 EA	CH020
2	COVER TOP	97T0440410	SECC T=0.6 PI	1 EA	CH030
3	CHASSIS MAIN	97T0635200	SECC T=1.0	1 EA	CH010
4	HEAT SINK	97T4412000	DIECASTING(ALDC-12)	1 EA	CH050

PACKING AS PNPKCANI02 AGC-5220, 5260

	NAME	CODE	Description	Q'ty	Location
1	CONN AS	97T8858300	"ISO 16P W/PHON,ILL"	1 EA	CN200
2	LABEL CONNECTION	97T9319710	STICKER 3A	1 EA	PK150
3	LABEL BAR CODE	97T9322610	STICKER	1 EA	PK220
4	LABEL CLASSIC	97T93275GD	STICKER	1 EA	PK200
5	MANUAL INSTRUCTION	97T9514400	ART PAPER	1 EA	PK160
6	ASSCESSORY AS DON	N5AC00036P	KOR-36	1 EA	00AS1

PCB MAIN AS PNMAMBNI19 AGC-5200, 5240RD-AS

	NAME	CODE	Description	Q'ty	Location
1	IC AUDIO	1BU1924F--	BU1924(SOP)	1 EA	IC204
2	IC RESET	1K1A7032AT	KIA7032AT/TSM	1 EA	IC302
3	IC CHIP REGULATOR	1K1A7808AF	KIA7808AF DPARK	1 EA	IC111
4	IC REGULATOR	1K1A7808P1	KIA7808API	1 EA	IC301
5	IC AUDIO	1PT2313L--	PT2313L	1 EA	IC202
6	IC CHIP CUSTOM	1S3P831B00	S3P831 BXZZ-QXRB	1 EA	IC201
7	IC POWER	1TDA8571J-	TDA8571J-Y	1 EA	IC203
8	COIL CHOKE	5LC301PA18	37X1X5.2 300UH P EI-19MM	1 EA	CH601
9	COIL INDUCTOR	5LL479K03K	4.7UH K 03 TA 26MM	1 EA	L401
10	CRYSTAL QUARTZ	5XJZ4R332D	HC-49/S 4.332MHZ 25PPM F	1 EA	XT501
11	CRYSTAL QUARTZ	5XJZ9R000D	HC-49S 9MHZ 30PPM	1 EA	XT401
12	CONN WAFER	97T6245700	FCZ100E-32RS-K	1 EA	CW201
13	CONN WAFER	97T6245900	12511HR 14P 1.25MM ANGLE	1 EA	CW3
14	PCB MAIN	97T65A83MA	330X190X1.6T/2 FR-1	1 EA	B0001
15	JACK ANT	97T6802500	9.5X20X27.5	1 EA	ANT01
16	TUNER FM/AM	97T7612800	KST-M4001LVO-10	1 EA	TU101
17	CONN AS	97T8865000	E3P 100M/M	1 EA	CW1
18	C ELECTRO	CEYE1C332E	SD 16V 3300MF (13X25)	1 EA	CE202
19	DIODE CHIP	DKDR729--U	KDR729-USC	2 EA	HD201 HD206
20	DIODE CHIP	DKDS160--B	KDS160-UF	10 EA	HD101 HD202 HD205 HD207 HD301 HD306 HD601 HD605 HD606 HD610
21	LED	DLT4H11G41	LT4H11G-41(RED)	1 EA	LD01
22	DIODE CHIP	DRF101L2SB	RF101L2S	6 EA	HD410 HD603 HD604 HD607 HD611 HD613
23	DIODE RECTIFER CHIP	DS3DD0214D	3A SMD RECTIFER	1 EA	HD612
24	DIODE CHIP ZENER	DZKDZ100V-	KDZ 10V USC	1 EA	HZ301
25	DIODE CHIP ZENER	DZKDZ5R1V-	KDZ5.1V USC	3 EA	HZ102 HZ601 HZ602
26	DIODE CHIP ZENER	DZKDZ5R6V-	KDZ5.6V USC	2 EA	HZ401 HZ604
27	DIODE CHIP ZENER	DZKDZ9R1V-	KDZ9.1V USC	1 EA	HZ101
28	MAIN CHIP AS DON	N5MC01712P	KOR-1712	1 EA	00MC1
29	PCB MAIN AS AUTO CHIP	PNMAJCNI19	AGC-5240RD-AS	1 EA	10002
30	PCB MAIN AS AUTO	PNMAJMNI19	AGC-5240RD-AS	1 EA	10001
31	TR CHIP	TDTA123JKA	DTA123JKA (E32)	2 EA	HQ101 HQ102
32	TR CHIP	TDTC323TKB	DTC323TK	2 EA	HQ610 HQ611
33	TR CHIP	TKRA101S-B	KRA101S	1 EA	HQ608
34	TR CHIP	TKRC102S-B	KRC102S	6 EA	HQ103 HQ104 HQ202 HQ205 HQ605 HQ609
35	TR CHIP	TKRC107S-B	KRC107S SOT-23 NU	1 EA	HQ1
36	TR CHIP	TKRC111S-B	KRC111S	1 EA	HQ105
37	TR TKSB772Y--	KSB772Y		1 EA	HQ607
38	TR CHIP	TKTC3295B-	KTC3295B RTK	2 EA	HQ107 HQ108
39	TR CHIP	TKTC3875YB	KTC3875Y SOT-23 ALY	2 EA	HQ301 HQ606
40	TR	TZ2SB1240R	2SB1240R	1 EA	HQ204
41	TR	TZDTC323TS	DTC323TSA SPT	1 EA	HQ601
42	TR	TZTC3198Y-	KTC3198Y-(1815Y) (AUTO)	1 EA	HQ401
43	TR	TZTC3199Y-	KTC-3199Y TAPING	1 EA	HQ302
44	TR	TZTC3205Y-	KTC3205Y (2236Y)	1 EA	HQ106

FRONT DETA AS PNFDCANP00 AGC-5240RD

	NAME	CODE	Description	Q'ty	Location
1	IC DRIVER	1PT6524---	PT6524--- QFP	1 EA	IC700
2	SW TACT	5S52643CL2	1C-1P SKMA 10918A 260G	18 EA	HS701 HS702 HS703 HS704 HS705 HS706 HS707 HS708 HS709 HS710 HS711 HS712 HS713 HS714 HS715 HS716 HS717 HS718
3	ENCODER VOLUME	5V3503A71A	EC22B20-ZZZ	1 EA	SW700
4	LCD NEGATIVE	97T0L2160N	A0285 OKUBO	1 EA	LCD70
5	REFLECTION LCD	97T2227000	PC LEXAN 121 CLEAR	1 EA	0F020
6	HOLDER LCD	97T2308500	"ABS XR-404,WHITE"	1 EA	0F010
7	BRKT LCD	97T2449100	SECC T0.6	1 EA	0F030
8	CUSHION GUIDE	97T4104500	FELT 25X4.5X0.3T BK	2 EA	0F100
9	CONN ZEBRA	97T6229600	--	1 EA	0F050
10	CONN-FLIP(PLUG)	97T6235000	FPP1444X	1 EA	CW1
11	PCB FRONT	97T65A85FR	SILVER 164X40X1.6T	1 EA	B002
12	SHEET LCD	97T9609100	PC D114 93.1X26.4	1 EA	0F040
13	LED	DSB3317G--	SB3317GB-BLUE	3 EA	HL718 HL719 HL720
14	LED CHIP	DSY1216C--	SY1216-C	18 EA	HL700 HL701 HL702 HL703 HL704 HL705 HL706 HL707 HL708 HL709 HL710 HL711 HL712 HL713 HL714 HL715 HL716 HL717
15	FR CHIP AS DON	N5FC01156P	KOR-1156	1 EA	00FC1
16	PCB FRONT AS AUTO CHIP	PNFRJCNP00	AGC-5240RD	1 EA	11002
17	PCB FRONT AS	PNFRMBNP00	AGC-5240RD	1 EA	11001

ESCUTCHEON AS PNESCANI00 AGC-5200, 5240RD-AS

	NAME	CODE	Description	Q'ty	Location
1	SW TACT	5S52625MP1	TP1140B	1 EA	SW701
2	PLATE PCB	97T0929500	PC	1 EA	0D010
3	CONNECTOR	97T6234900	FPS1442X(SOKET)	1 EA	CWFR
4	PCB ESC	97T65A88ES	160X118XT1.6/3	1 EA	B0004
5	LAMP PILOT	97T82L6F95	9V 50MA D3.0 C3RDHT003	1 EA	PL701
6	CONN AS	97T8879500	FFC 14P 1.25MM PITCH 50MM	1 EA	CN101
7	ESCUTCHEON AS DON	N5ES00773P	KOR-773	1 EA	00ES1
8	ESC PCB AS	PNESMBNI00	AGC-5200	1 EA	21001

PCB ISO AS PN1SMBJA06 AKD-0225H-AX

	NAME	CODE	Description	Q'ty	Location
1	PCB ISO	97T659661S	160X137.5X1.6/9	1 EA	B006
2	CONN AS	97T8856100	ISO 16P WITH 10A FUSE	1 EA	CW105
3	ISO ASS'Y DON	N51S00115P	KOR-115	1 EA	00IS1

DECK AS PNDKCANI00 AGC-5200, 5240RD-AS

	NAME	CODE	Description	Q'ty	Location
1	IC CHIP DRIVER	1389259ED-	KA9259ED	1 EA	IC5
2	IC REGULATOR SMD	1BA33C18FP	BA33C18FP(3.3V/1.8V)	1 EA	IC6
3	IC SDRAM	1HY57V1616	HY57V1616	1 EA	IC2
4	IC SSP	1S1L9226--	S1L9226	1 EA	IC1
5	IC CHIP DSP	1S5L9279--	S5L9279 DSP+DECODER	1 EA	IC3
6	SWITCH DETECT	97L0S00600	MPU10853MLB4	1 EA	SW1
7	DECK MECHANISM	97T6013200	CDX-200DW	1 EA	DK010
8	CONNECTOR	97T6237600	08-6224-016-001-800	1 EA	CN1
9	CONN WAFER	97T6245500	20010WR-0400	1 EA	CN2
11	CONN WAFER	97T6245700	FCZ100E-32RS-K	1 EA	CN3
12	PCB SERVO	97T65A81SE	247X197X1T/4(MP3)	1 EA	B0001
13	CONN AS	97T8879600	FFC 32P 1MM PITCH 160MM	1 EA	CN102
14	CHIP SOLID INDUCTOR	HLP100D24B	LK2125100K-T 10UH	5 EA	L1 L2 L3 L4 L5
15	CRYSTAL CHIP	HXB16R93ME	SMD 16.9344MHZ 30PPM	1 EA	X1
16	CD DECK AS DON	N5DC01024P	KOR-1024	1 EA	00DC1
17	CD DECK AS DON	N5DK00662P	KOR-662	1 EA	00DK1
18	MP3 DECK AS	PNDKCALQ03	CDX-400F AGC-5200	1 EA	22001
19	MP3 DECK TOTAL AS	PNDTCALQ01	CDX-400F	1 EA	22002
20	PCB SERVO AS AUTO CHIP	PNSVJCLKB3	CDX-400F BOTTOM	1 EA	10003
21	PCB SERVO AS AUTO CHIP	PNSVJCLKT3	CDX-400F TOP	1 EA	10002
22	PCB SERVO AS	PNSVMBLK03	CDX-400F AGC-5200	1 EA	22003
23	TR	TKSB772Y--	KSB772Y	1 EA	Q2
24	TR CHIP	TKTA1505YB	KTA1505-Y	1 EA	Q1

CHASSIS MAIN AS PNCHCANI00 AGC-5200, 5240, 5280

	NAME	CODE	Description	Q'ty	Location
1	COVER BOTTOM	97T0440300	SECC T=0.6	1 EA	CH020
2	COVER TOP	97T0440410	SECC T=0.6 PI	1 EA	CH030
3	CHASSIS MAIN	97T0635200	SECC T=1.0	1 EA	CH010
4	HEAT SINK	97T4412000	DIECASTING(ALDC-12)	1 EA	CH050

PACKING AS PNPKCANI01 AGC-5200, 5240RD-AS

	NAME	CODE	Description	Q'ty	Location
1	CONN AS	97T8858300	"ISO 16P W/PHON,ILL"	1 EA	CN200
2	LABEL CONNECTION	97T9319710	STICKER 3A	1 EA	PK150
3	LABEL BAR CODE	97T9322610	STICKER	1 EA	PK220
4	LABEL CLASSIC	97T93275GD	STICKER	1 EA	PK200
5	MANUAL INSTRUCTION	97T9514500	ART PAPER REF.DES	1 EA	PK160
6	ASSCESSORY AS DON	N5AC00036P	KOR-36	1 EA	00AS1

PCB MAIN AS PNMAMBNI04 AGC-5220, 5260

	NAME	CODE	Description	Q'ty	Location
1	IC AUDIO	1BU1924F--	BU1924(SOP)	1 EA	IC204
2	IC RESET	1K1A7032AT	KIA7032AT/TSM	1 EA	IC302
3	IC CHIP REGULATOR	1K1A7808AF	KIA7808AF DPARK	1 EA	IC111
4	IC REGULATOR	1K1A7808P1	KIA7808API	1 EA	IC301
5	IC AUDIO	1PT2313L--	PT2313L	1 EA	IC202
6	IC CHIP CUSTOM	1S3P831B00	S3P831 BXZZ-QXRB	1 EA	IC201
7	IC POWER	1TDA8571J-	TDA8571J-Y	1 EA	IC203
8	COIL CHOKE	5LC301PA18	37X1X5.2 300UH P EI-19MM	1 EA	CH601
9	COIL INDUCTOR	5LL479K03K	4.7UH K 03 TA 26MM	1 EA	L401
10	CRYSTAL QUARTZ	5XJZ4R332D	HC-49/S 4.332MHZ 25PPM F	1 EA	XT501
11	CRYSTAL QUARTZ	5XJZ9R000D	HC-49S 9MHZ 30PPM	1 EA	XT401
12	CON DETACHABLE(CNDT)	97T62150A0	FP.S-12-3.2-GG	1 EA	U1
13	CONN WAFER	97T6245700	FCZ100E-32RS-K	1 EA	CW201
14	PCB MAIN	97T65A83MA	330X190X1.6T/2 FR-1	1 EA	B0001
15	JACK ANT	97T6802500	9.5X20X27.5	1 EA	ANT01
16	TUNER FM/AM	97T7612800	KST-M4001LVO-10	1 EA	TU101
17	CONN AS	97T8865000	E3P 100M/M	1 EA	CW1
18	DIODE CHIP	DKDR729--U	KDR729-USC	2 EA	HD201 HD206
19	DIODE CHIP	DKDS160--B	KDS160-UF	16 EA	HD1 HD101 HD202 HD205 HD207
					HD301 HD306 HD601 HD605 HD606
					HD610
20	LED	DLT4H11G41	LT4H11G-41(RED)	1 EA	LD01
21	DIODE CHIP	DRF101L2SB	RF101L2S	6 EA	HD410 HD603 HD604 HD607 HD611
					HD613
22	DIODE RECTIFER CHIP	DS3DD0214D	3A SMD RECTIFER	1 EA	HD612
23	DIODE CHIP ZENER	DZKDZ100V-	KDZ 10V USC	1 EA	HZ301
24	DIODE CHIP ZENER	DZKDZ5R1V-	KDZ5.1V USC	3 EA	HZ102 HZ601 HZ602
25	DIODE CHIP ZENER	DZKDZ5R6V-	KDZ5.6V USC	2 EA	HZ401 HZ604
26	DIODE CHIP ZENER	DZKDZ9R1V-	KDZ9.1V USC	1 EA	HZ101
27	MAIN CHIP AS DON	N5MC01712P	KOR-1712	1 EA	00MC1
28	PCB MAIN AS AUTO CHIP	PNMAJCNI04	AGC-5220RT	1 EA	10002
29	PCB MAIN AS AUTO	PNMAJMNI04	AGC-5220RT	1 EA	10001
30	TR CHIP	TDTA123JKA	DTA123JKA (E32)	1 EA	HQ101 HQ102
31	TR CHIP	TDTC323TKB	DTC323TK	1 EA	HQ610 HQ611
32	TR CHIP	TKRA101S-B	KRA101S	1 EA	HQ608
33	TR CHIP	TKRC102S-B	KRC102S	6 EA	HQ103 HQ104 HQ202 HQ205 HQ605
					HQ609
34	TR CHIP	TKRC107S-B	KRC107S SOT-23 NU	1 EA	HQ1
35	TR CHIP	TKRC111S-B	KRC111S	1 EA	HQ105
36	TR	TKSB772Y--	KSB772Y	1 EA	HQ607
37	TR CHIP	TKTC3295B-	KTC3295B RTK	2 EA	HQ107 HQ108
38	TR CHIP	TKTC3875YB	KTC3875Y SOT-23 ALY	2 EA	HQ301 HQ606
39	TR	TZ2SB1240R	2SB1240R	1 EA	HQ204
40	TR	TZDTC323TS	DTC323TSA SPT	1 EA	HQ601
41	TR	TZTC3198Y-	KTC3198Y-(1815Y) (AUTO)	1 EA	HQ401
42	TR	TZTC3199Y-	KTC-3199Y TAPING	1 EA	HQ302
43	TR	TZTC3205Y-	KTC3205Y (2236Y)	1 EA	HQ106

FRONT DETA AS PNFDCANQ00 AGC-5260

	NAME	CODE	Description	Q'ty	Location
1	IC DRIVER	1PT6524---	PT6524--- QFP	1 EA	IC700
2	SW TACT	5S52643CL2	1C-1P SKMA 10918A 260G	18 EA	HS700 HS701 HS702 HS703 HS704 HS705 HS706 HS707 HS708 HS709 HS710 HS711 HS712 HS713 HS714 HS715 HS716 HS717
3	ENCODER VOLUME	5V3503A71A	EC22B20-ZZZ	1 EA	SW700
4	LCD	97T0L1600P	LS-09058P00	1 EA	LCD70
5	CONN DETACHABLE	97T62150B0	FP.P-14-3.4-GG	1 EA	CW700
6	PCB FRONT	97T65A86FR	SILVER 170X40X1.6T	1 EA	B002
7	LED CHIP	DSY1216C--	SY1216-C	18 EA	HL700 HL701 HL702 HL703 HL704 HL705 HL706 HL707 HL708 HL709 HL710 HL711 HL712 HL713 HL714 HL715 HL716 HL717
8	LED	DSY3317F--	SY3317F	2 EA	HL718 HL719
9	FR CHIP AS DON	N5FC00437P	KOR-437	1 EA	00FC1
10	FRONT AS DON	N5FR01301P	KOR-1301	1 EA	00FR1
11	PCB FRONT AS AUTO CHIP	PNFRJCNQ00	AGC-5260AT	1 EA	11002
12	PCB FRONT AS	PNFRMBNQ00	AGC-5260AT	1 EA	11001

ESCUTCHEON AS PNESCALU00 ACP-2306

	NAME	CODE	Description	Q'ty	Location
1	ESCUTCHEON	97T1417000	ABS XR-404	1 EA	ES010
2	ESCUTCHEON AS DON	N5ES00158P	KOR-158	1 EA	00ES1

PCB ISO AS PN1SMBJA06 AKD-0225H-AX

	NAME	CODE	Description	Q'ty	Location
1	PCB ISO	97T659661S	160X137.5X1.6/9	1 EA	B006
2	CONN AS	97T8856100	ISO 16P WITH 10A FUSE	1 EA	CW105
3	ISO ASS'Y DON	N51S00115P	KOR-115	1 EA	00IS1

DECK AS MP3 PNDKCANI03 AGC-5220, 5260

	NAME	CODE	Description	Q'ty	Location
1	IC CHIP DRIVER	1389259ED-	KA9259ED	1 EA	IC5
2	IC REGULATOR SMD	1BA33C18FP	BA33C18FP(3.3V/1.8V)	1 EA	IC6
3	IC SDRAM	1HY57V1616	HY57V1616	1 EA	IC2
4	IC SSP	1S1L9226--	S1L9226	1 EA	IC1
5	IC CHIP DSP	1S5L9279--	S5L9279 DSP+DECODER	1 EA	IC3
6	SWITCH DETECT	97L0S00600	MPU10853MLB4	1 EA	SW1
7	DECK MECHANISM	97T6013200	CDX-200DW	1 EA	DK060
8	CONNECTOR	97T6237600	08-6224-016-001-800	1 EA	CN1
9	CONN WAFER	97T6245500	20010WR-0400	1 EA	CN2
10	CONN WAFER	97T6245600	20010WR-0300	1 EA	CN5
11	CONN WAFER	97T6245700	FCZ100E-32RS-K	1 EA	CN3
12	PCB SERVO	97T65A81SE	247X197X1T/4(MP3)	1 EA	B0001
13	CONN AS	97T8879600	FFC 32P 1MM PITCH 160MM	1 EA	CN102
14	CHIP SOLID INDUCTOR	HLP100D24B	LK2125100K-T 10UH	5 EA	L1 L2 L3 L4 L5
15	CRYSTAL CHIP	HXB16R93ME	SMD 16.9344MHZ 30PPM	1 EA	X1
16	CD DECK AS DON	N5DC01024P	KOR-1024	1 EA	00DC1
17	CD DECK AS DON	N5DK00662P	KOR-662	1 EA	0DK01
18	PCB SERVO AS AUTO CHIP	PNSVJCLKB3	CDX-400F BOTTOM	1 EA	10003
19	PCB SERVO AS AUTO CHIP	PNSVJCLKT3	CDX-400F TOP	1 EA	10002
20	PCB SERVO AS	PNSVMBLK03	CDX-400F AGC-5200	1 EA	22001
21	TR	TKSB772Y--	KSB772Y	1 EA	Q2
22	TR CHIP	TKTA1505YB	KTA1505-Y	1 EA	Q1

	NAME	CODE	Description	Q'ty	Location
1	COVER BOTTOM	97T0440300	SECC T=0.6	1 EA	CH020
2	COVER TOP	97T0440410	SECC T=0.6 PI	1 EA	CH030
3	CHASSIS MAIN	97T0635200	SECC T=1.0	1 EA	CH010
4	HEAT SINK	97T4412000	DIECASTING(ALDC-12)	1 EA	CH050

PACKING AS PNPKCANI02 AGC-5220, 5260

	NAME	CODE	Description	Q'ty	Location
1	CONN AS	97T8858300	"ISO 16P W/PHON,ILL"	1 EA	CN200
2	LABEL CONNECTION	97T9319710	STICKER 3A	1 EA	PK150
3	LABEL BAR CODE	97T9322610	STICKER	1 EA	PK220
4	LABEL CLASSIC	97T93275GD	STICKER	1 EA	PK200
5	MANUAL INSTRUCTION	97T9514400	ART PAPER	1 EA	PK160
6	ASSCESSORY AS DON	N5AC00036P	KOR-36	1 EA	00AS1

PCB MAIN AS PNMAMBNJ00 AGC-5280RD

	NAME	CODE	Description	Q'ty	Location
1	IC AUDIO	1BU1924F--	BU1924(SOP)	1 EA	IC204
2	IC RESET	1K1A7032AT	KIA7032AT/TSM	1 EA	IC302
3	IC CHIP REGULATOR	1K1A7808AF	KIA7808AF DPARK	1 EA	12
4	IC REGULATOR	1K1A7808P1	KIA7808API	1 EA	IC301
5	IC AUDIO	1PT2313L--	PT2313L	1 EA	IC202
6	IC CHIP CUSTOM	1S3P831B20	S3P831BXZZ-QXRB(5280)	1 EA	IC201
7	IC POWER	1TDA8571J-	TDA8571J-Y	1 EA	IC203
8	COIL CHOKE	5LC301PA18	37X1X5.2 300UH P EI-19MM	1 EA	CH601
9	COIL INDUCTOR	5LL228K03K	0.22UH K 03 TB 26MM	2 EA	L402 L403
10	COIL INDUCTOR	5LL479K03K	4.7UH K 03 TA 26MM	1 EA	L401
11	CRYSTAL QUARTZ	5XJZ4R332D	HC-49/S 4.332MHZ 25PPM F	1 EA	XT501
12	CRYSTAL QUARTZ	5XJZ9R000D	HC-49S 9MHZ 30PPM	1 EA	XT401
13	CONN WAFER	97T6245700	FCZ100E-32RS-K	1 EA	CW201
14	CONN WAFER	97T6245900	12511HR 14P 1.25MM ANGLE	1 EA	CW3
15	PCB MAIN	97T65A82MA	330X190X1.6T/2 FR-1	1 EA	B0001
16	JACK ANT	97T6802500	9.5X20X27.5	1 EA	ANT01
17	TUNER FM/AM	97T7612800	KST-M4001LVO-10	1 EA	TU101
18	CONN AS	97T8865000	E3P 100M/M	1 EA	CW1
19	DIODE CHIP	DKDR729--U	KDR729-USC	4 EA	HD201 HD203 HD204 HD206
20	DIODE CHIP	DKDS160--B	KDS160-UF	10 EA	HD101 HD202 HD205 HD207 HD301 HD306 HD601 HD605 HD606 HD610
21	LED	DLT4H11G41	LT4H11G-41(RED)	1 EA	11
22	DIODE CHIP	DRF101L2SB	RF101L2S	6 EA	HD410 HD603 HD604 HD607 HD611 HD613
23	DIODE RECTIFER CHIP	DS3DD0214D	3A SMD RECTIFER	1 EA	HD612
24	DIODE CHIP ZENER	DZKDZ100V-	KDZ 10V USC	1 EA	HZ301
25	DIODE CHIP ZENER	DZKDZ5R1V-	KDZ5.1V USC	3 EA	HZ102 HZ601 HZ602
26	DIODE CHIP ZENER	DZKDZ5R6V-	KDZ5.6V USC	3 EA	HZ401 HZ603 HZ604
27	DIODE CHIP ZENER	DZKDZ9R1V-	KDZ9.1V USC	1 EA	HZ101
28	F CHIP SOLID INDUCT	HFB21A102S	BLM21AG102SN1	1 EA	HL701
29	MAIN CHIP AS DON	N5MC01798P	KOR-1798	1 EA	00MC1
30	PCB MAIN AS AUTO CHIP	PNMAJCNJ00	AGC-5280RD	1 EA	10002
31	PCB MAIN AS AUTO	PNMAJMNJ00	AGC-5280RD	1 EA	10001
32	TR CHIP	TDTA123JKA	DTA123JKA (E32)	2 EA	HQ101 HQ102
33	TR CHIP	TDTC323TKB	DTC323TK	2 EA	HQ2 HQ3
34	TR CHIP	TKRA101S-B	KRA101S	1 EA	HQ608
35	TR CHIP	TKRC102S-B	KRC102S	7 EA	HQ103 HQ104 HQ202 HQ205 HQ604 HQ605 HQ609
36	TR CHIP	TKRC107S-B	KRC107S SOT-23 NU	1 EA	HQ1
37	TR CHIP	TKRC111S-B	KRC111S	1 EA	HQ105
38	TR	TKSB772Y--	KSB772Y	1 EA	HQ607
39	TR	TKTC2026--	KTC2026	1 EA	HQ602
40	TR CHIP	TKTC3295B-	KTC3295B RTK	2 EA	HQ107 HQ108
41	TR CHIP	TKTC3875YB	KTC3875Y SOT-23 ALY	2 EA	HQ301 HQ606
42	TR	TZ2SB1240R	2SB1240R	3 EA	HQ201 HQ204 HQ603
43	TR	TZDTC323TS	DTC323TSA SPT	1 EA	HQ601
44	TR	TZTC3198Y-	KTC3198Y-(1815Y) (AUTO)	1 EA	HQ401
45	TR	TZTC3199Y-	KTC-3199Y TAPING	1 EA	HQ302
46	TR	TZTC3205Y-	KTC3205Y (2236Y)	1 EA	HQ106

FRONT DETA AS PNFDCANJ00 AGC-5280RD

	NAME	CODE	Description	Q'ty	Location
1	IC DRIVER	1PT6524---	PT6524--- QFP	1 EA	IC700
2	SW TACT	5S52643CL2	1C-1P SKMA 10918A 260G	18 EA	HS701 HS702 HS703 HS704 HS705 HS706 HS707 HS708 HS709 HS710 HS711 HS712 HS713 HS714 HS715 HS716 HS717 HS718
3	ENCODER VOLUME	5V3503A71A	EC22B20-ZZZ	1 EA	SW700
4	LCD BLACKMASK	97T0L2150N	91709BMM1TTN	1 EA	LCD70
5	REFLECTION LCD	97T2227000	PC LEXAN 121 CLEAR	1 EA	0F020
6	HOLDER LCD	97T2309900	PC WHITE	1 EA	0F010
7	BRKT LCD	97T2449100	SECC T0.6	1 EA	0F030
8	CUSHION GUIDE	97T4104500	FELT 25X4.5X0.3T BK	2 EA	0F100
9	CONN ZEBRA	97T6229600	--	1 EA	0F050
10	CONN-FLIP(PLUG)	97T6235000	FPP1444X	1 EA	CW1
11	PCB FRONT	97T65A87FR	SILVER 150X40X1.6T	1 EA	B002
12	SHEET LCD	97T9609100	PC D114 93.1X26.4	1 EA	0F040
13	LED CHIP	DSY1216C--	SY1216-C	15 EA	HL700 HL701 HL702 HL703 HL704 HL705 HL706 HL707 HL708 HL709 HL710 HL711 HL712 HL713 HL714
14	LED CHIP	DUW1149BTR	UW1149B-16-TR	2 EA	HL718 HL720
15	FR CHIP AS DON	N5FC01156P	KOR-1156	1 EA	00FC1
16	FRONT AS DON	N5FR01157P	KOR-1157	1 EA	00FR1
17	PCB FRONT AS AUTO CHIP	PNFRJCNJ00	AGC-5280RD	1 EA	11002
18	PCB FRONT AS	PNFRMBNJ00	AGC-5280RD	1 EA	11001

ESCUTCHEON AS PNESCANJ00 AGC-5280RD

	NAME	CODE	Description	Q'ty	Location
1	SW TACT	5S52625MP1	TP1140B	1 EA	SW701
2	PLATE PCB	97T0929500	PC	1 EA	0D010
3	CONNECTOR	97T6234900	FPS1442X(SOKET)	1 EA	CWFR
4	PCB ESC	97T65A82ES	330X190X1.6T/2 FR1	1 EA	B0004
5	CONN AS	97T8879500	FFC 14P 1.25MM PITCH 50MM	1 EA	CN101
6	ESCUTCHEON AS DON	N5ES00773P	KOR-773	1 EA	00ES1
7	ESC PCB AS	PNESMBNJ00	AGC-5280RD	1 EA	21001

PCB ISO AS PN1SMBJA06 AKD-0225H-AX

	NAME	CODE	Description	Q'ty	Location
1	PCB ISO	97T659661S	160X137.5X1.6/9	1 EA	B006
2	CONN AS	97T8856100	ISO 16P WITH 10A FUSE	1 EA	CW105
3	ISO ASS'Y DON	N51S00115P	KOR-115	1 EA	00IS1

DECK AS PNDKCANJ00 AGC-5280RD

	NAME	CODE	Description	Q'ty	Location
1	IC CHIP DRIVER	1389259ED-	KA9259ED	1 EA	IC5
2	IC REGULATOR SMD	1BA33C18FP	BA33C18FP(3.3V/1.8V)	1 EA	IC6
3	IC SDRAM	1HY57V1616	HY57V1616	1 EA	IC2
4	IC SSP	1S1L9226--	S1L9226	1 EA	IC1
5	IC CHIP DSP	1S5L9279--	S5L9279 DSP+DECODER	1 EA	IC3
6	DECK MECHANISM	97T6013200	CDX-200DW	1 EA	DK060
7	CONNECTOR	97T6237600	08-6224-016-001-800	1 EA	CN1
8	CONN WAFER	97T6245500	20010WR-0400	1 EA	CN2
9	CONN WAFER	97T6245600	20010WR-0300	1 EA	CN5
10	CONN WAFER	97T6245700	FCZ100E-32RS-K	1 EA	CN3
11	PCB SERVO	97T65A95SE	151.3X213.8/1T/2 (MP3)	1 EA	B0001
12	CONN AS	97T8879600	FFC 32P 1MM PITCH 160MM	1 EA	CN102
13	CHIP SOLID INDUCTOR	HLP100D24B	LK2125100K-T 10UH	5 EA	L1 L2 L3 L4 L5
14	CRYSTAL CHIP	HXB16R93ME	SMD 16.9344MHZ 30PPM	1 EA	X1
15	CD DECK AS DON	N5DC01024P	KOR-1024	1 EA	00DC1
16	CD DECK AS DON	N5DK00662P	KOR-662	1 EA	00DK1
17	PCB SERVO AS AUTO CHIP	PNSVJCLKB3	CDX-400F BOTTOM	1 EA	10003
18	PCB SERVO AS AUTO CHIP	PNSVJCLKT5	CDX-400F AGC-5200ED	1 EA	10002
19	PCB SERVO AS	PNSVMBLK05	CDX-400F AGC-5200ED	1 EA	DK050
20	TR	TKSB772Y--	KSB772Y	1 EA	Q2
21	TR CHIP	TKTA1505YB	KTA1505-Y	1 EA	Q1

CHASSIS MAIN AS PNCHCANI00 AGC-5200, 5240, 5280

	NAME	CODE	Description	Q'ty	Location
1	COVER BOTTOM	97T0440300	SECC T=0.6	1 EA	CH020
2	COVER TOP	97T0440410	SECC T=0.6 PI	1 EA	CH030
3	CHASSIS MAIN	97T0635200	SECC T=1.0	1 EA	CH010
4	HEAT SINK	97T4412000	DIECASTING(ALDC-12)	1 EA	CH050

PACKING AS PNPKCANJ01 AGC-5280RD

	NAME	CODE	Description	Q'ty	Location
1	CONN AS	97T8858300	"ISO 16P W/PHON,ILL"	1 EA	CN200
2	LABEL CONNECTION	97T9319710	STICKER 3A	1 EA	PK150
3	LABEL BAR CODE	97T9322610	STICKER	1 EA	PK220
4	LABEL CLASSIC	97T93275GD	STICKER	1 EA	PK200
5	MANUAL INSTRUCTION	97T9515000	ART PAPER REF.DESIGN	1 EA	PK160
6	ASSCESSORY AS DON	N5AC00036P	KOR-36	1 EA	00AS1

PCB MEMORY AS PNMMMBNJ00 AGC-5280RD

	NAME	CODE	Description	Q'ty	Location
1	IC CHIP REGULATOR	1K1A78D33F	KIA78D33F DPARK	1 EA	ICM2
2	IC USB	1TCM51F01M	TCM51F01M	1 EA	ICM1
3	COIL INDUCTOR	5LL100K03K	10UH K 03 TB 26MM	1 EA	LM2
4	COIL INDUCTOR	5LL479K03K	4.7UH K 03 TA 26MM	1 EA	LM1
5	CONNECTOR	97T6246200	YFAW200-24-2MM ANGLE	1 EA	J6
6	CONNECTOR	97T6246300	SCU-630 USB SOCKET	1 EA	USB
7	SOCKET SD-CARD	97T6368900	SCM-713	1 EA	CARD
8	PCB MEMORY	97T65A82MM	330X190X1.6T/2 FR1	1 EA	B0003
9	CRYSTAL CHIP QUARTZ	HXC12R000D	HC-49S 12MHZ 22PPM SMD	1 EA	XM1
10	MEMORY CHIP AS DON	N5MM00386P	KOR-386	1 EA	00MM1
11	MEMORY PCB AS	N5MP00530P	KOR-530	1 EA	00MP1
12	PCB MEMORY AS AUTO CHIP	PNMMJCNJ00	AGC-5280RD	1 EA	13002
13	PCB MEMORY AS AUTO	PNMMJMNJ00	AGC-5280RD	1 EA	13001
14	TR CHIP	TKRC107S-B	KRC107S SOT-23 NU	1 EA	QM1
15	TR CHIP	TKTA1504YB	KTA1504Y SOT-23 ASY	1 EA	QM2
16	TR CHIP	TKTC3875YB	KTC3875Y SOT-23 ALY	2 EA	QM3 QM4

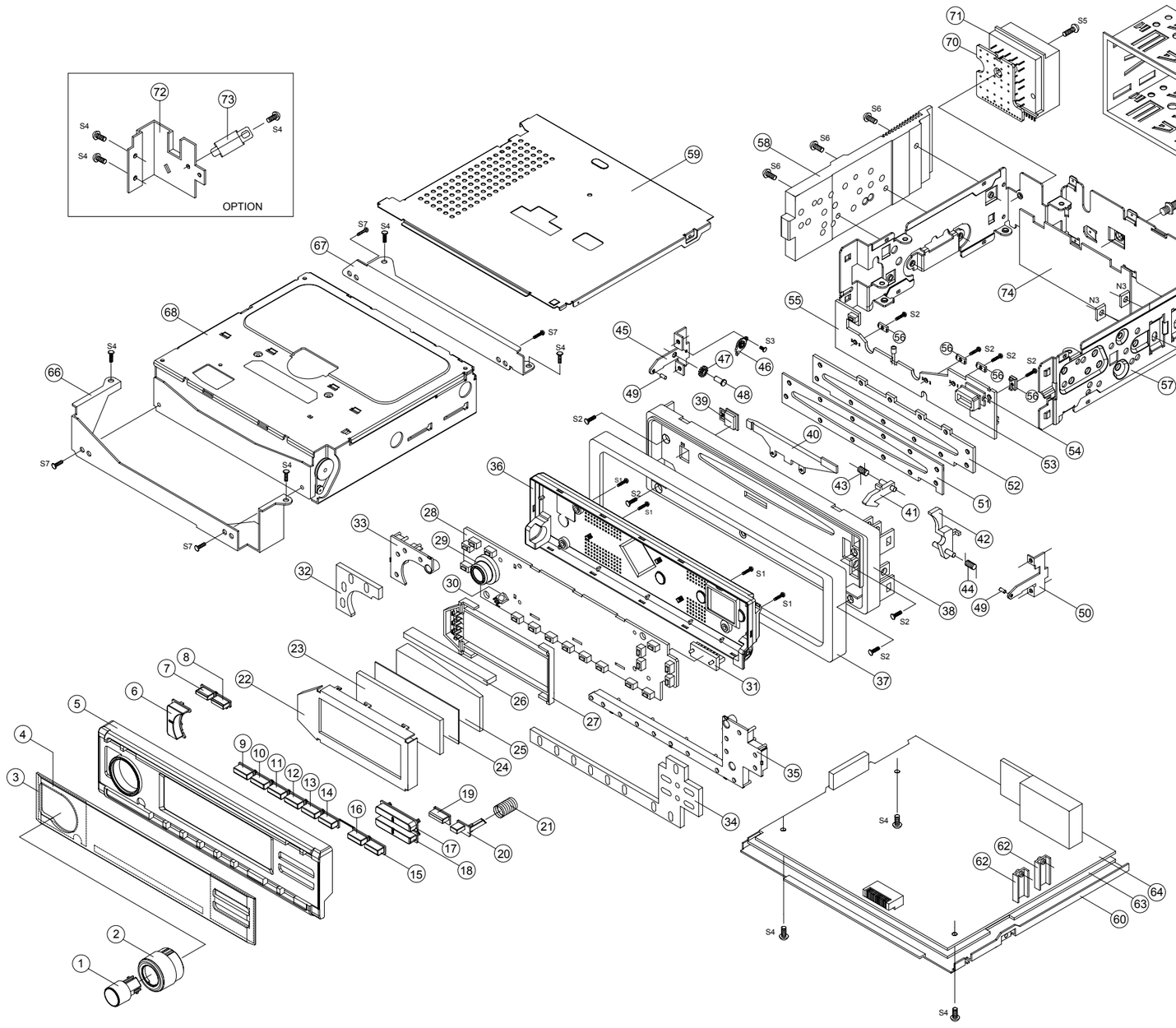

NO.	PART CORD	PART NAME	Q'TY	DESCRIPTION	REMARK
B1	9TT3104900	BOLT HEX	1	SM20C M5X(3+2+10)	
S7	7173260512	SCREW TAPTITE	4	TT2 BIN 2.6X5 MFZN BK	
S6	7173301211	SCREW TAPTITE	3	TT2 BIN 3X12 MFZN	
S5	7173301011	SCREW TAPTITE	3	TT2 BIN 3X10 MFZN	
S4	7173300811	SCREW TAPTITE	20	TT2 BIN 3X8 MFZN	
S3	7173203512	SCREW TAPTITE	1	TT2 BIN 2X3.5 MFZN B.K	
S2	7173200612	SCREW TAPTITE	8	TT2 BIN 2X6 MFZN BK	
S1	7173200812	SCREW TAPTITE	4	TT2 BIN 2X8 MFZN B.K	
N3	7372300211	NUT SQUARE	2	4N-2-3 MFZN	
75	9T6368700	SOCKET DIN	1	LN-0505-008 WIRE TYPE	
74	9T5603500	INSULATION TUNER	1	PE T=0.25	
73	9T72409930	BRKT CONN	1	SECC	
72	9T72451100	BRACKET CONN	1	SECC T1.0	OPTION
71	9T78856100	CONN AS	1	ISO 16P WITH 10A FUSE	
70	9T659661S	PCB ISO	1	160X137.5X1.6/9	
69					
68		CD DECK	1		
67	9T72461000	BRKT DECK R	1	SECC T1.0	
66	9T72460900	BRKT DECK F	1	SECC T1.0	
65	9T70628200	FRAME MOUNTING	1	SECC T0.6	
64		PCB MAIN	1	XPC	
63	9T75603200	INSULATION MAIN	1	PC T0.25	
62	9T72307000	HOLDER REG	2	PC LEXAN 121 B.K	
61	9T76802500	JACK ANT	1	9.5X20X27.5	
60	9T70440300	COVER BOTTOM	1	SECC T0.6	
59	9T70440400	COVER TOP	1	SECC T0.6	
58	9T74410600	HEAT SINK	1	AL 6063-T5	
57	9T70635200	CHASSIS MAIN	1	SECC T1.0	
56	9T72448800	BRACKET PCB	4	ABS XR-404	
55	9T76599GES	PCB ESC	1	FR-1	
54	9T70929500	PLATE PCB	1	PC	
53	9T76234900	CONNECTOR	1	FPS1442X(SOCKET)	
52	9T72448700	BRKT DOOR	1	SECC T=0.6	
51	9T74104700	NET DOOR	1	KIMLON	
50	9T72449000	BRACKET PANEL R	1	SECC T1.0	
49	9T72100100	HINGE BRKT PANEL	2	C3604	
48	9T73603700	SHAFT BRKT PANEL	1	BSBM	
47	9T72700400	GEAR MIDDLE	1	P.O.M	
46	9T72610600	DAMPER GEAR	1	P.O.M	
45	9T72448900	BRACKET PANEL L	1	SECC T1.0	
44	9T73015700	SPRING PUSH	1	SUS-304	
43	9T73015600	SPRING HOOK	1	SUS-304	
42	9T72610400	LEVER PUSH	1	ABS XR-404	
41	9T72610500	LEVER HOOK	1	ABS XR-404	
40	9T72226900	REFLECTION DOOR	1	PC LEXAN 121 CLEAR	
39	9T713E2000	KNOB EJECT	1	PC LEXAN 121 MILKY	
38	9T71416100	ESCUTCHEON	1	ABS XR-404	
37	9T70929200	PLATE TRIM	1	ABS XR-404	
36	9T70113200	CABINET BACK	1	ABS XR-404	
35	9T72233300	REFLECTION R	1	PC LEXAN 121 CLEAR	
34	9T74234000	CUSHION R	1	SPONGE T=3.0	
33	9T72233200	REFLECTION L	1	PC LEXAN 121 CLEAR	
32	9T74233900	CUSHION L	1	SPONGE T=3.0	
31	9T76235000	CONN-FLIP(PLUG)	1	FPP1444X	
30	9T72504200	SUPPORTER SPACE	1	FELT	OPTION
29	5V3503A71A	ENCODER VOLUME	1	EC22B20-ZZZ	
28	9T75990FR	PCB FRONT	1	FR-4	
27	9T72308500	HOLDER LCD	1	PC LEXAN 121 WHITE	
26	9T76229600	CONN ZEBRA	1		
25	9T72227000	REFLECTION LCD	1	PC LEXAN 121 CLEAR	
24	9T79609200	SHEET LCD	1	PC D114	
23	9T70L1630N	LCD BLACKMASKING	1	KXN35844AAB	
22	9T72449100	BRACKET LCD	1	SECC T=1.0	
21	9T73015000	SPRING OPEN	1	SUS 304	
20	9T713G9900	KNOB OPEN	1	ABS XR-404	
19	9T713G8400	KNOB BAND	1	PC LEXAN-121	
18	9T713G8800	KNOB SCAN/INFO	1	PC LEXAN-121	
17	9T713G8700	KNOB TA/LOC	1	PC LEXAN-121	
16	**9T713G8900**	**KNOB AUT**	1	PC LEXAN-121	
15	9T713G9000	KNOB MUTE	1	PC LEXAN-121	
14	9T713G9600	KNOB PRESET 6	1	PC LEXAN-121	
13	9T713G9500	KNOB PRESET 5	1	PC LEXAN-121	
12	9T713G9400	KNOB PRESET 4	1	PC LEXAN-121	
11	9T713G9300	KNOB PRESET 3	1	PC LEXAN-121	
10	9T713G9200	KNOB PRESET 2	1	PC LEXAN-121	
9	9T713G9100	KNOB PRESET 1	1	PC LEXAN-121	
8	9T713G8600	KNOB SEL	1	PC LEXAN-121	
7	9T713G8500	KNOB SRC	1	PC LEXAN-121	
6	9T713G8300	KNOB TUNE UP/DN	1	PC LEXAN-121	
5	9T70113100	CABINET FRONT	1	ABS XR-404	
4		SHEET WINDOW A/B/C	1	DOUBLE TAPE	NITTO #500
3	9T71611700	WINDOW DISPLAY	1	ACRYL IH-830H	
2	9T713G9800	KNOB VOLUME	1	ABS XR-404	
1	9T713G9700	KNOB POWER	1	PC LEXAN-121	

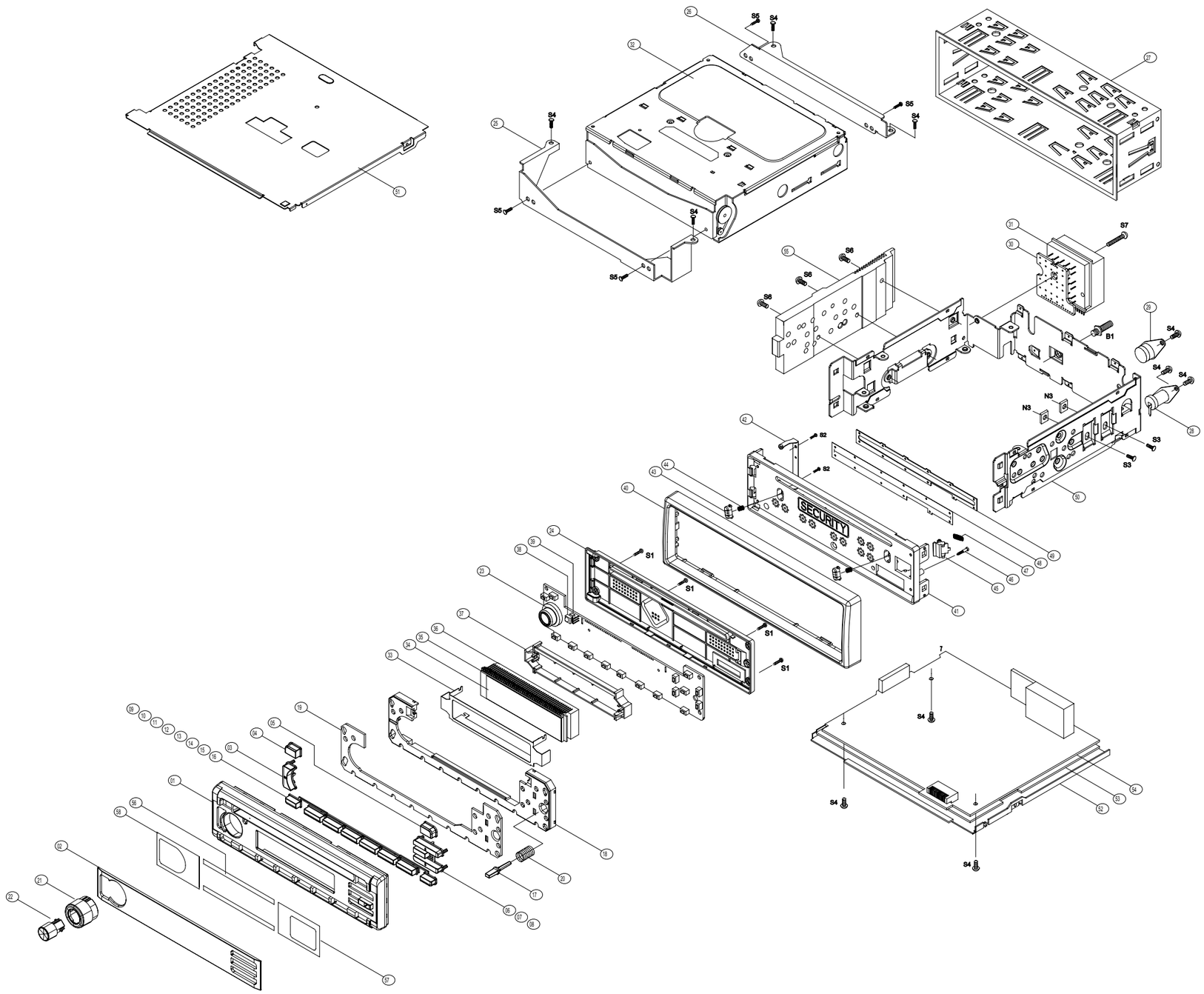

B1	97T3104900	BOLT HEX	1	SM20C M5X(3+2+10) MFZN		
S7	7173301011	SCREW TAPPTITE	1	TT2 BIN 3X10 MFZN		
S6	7173300811	SCREW TAPPTITE	3	TT2 BIN 3X8 MFZN		
S5	7173260512	SCREW TAPPTITE	4	TT2 BIN 2.6X5 MFZN BK		
S4	7173306611	SCREW TAPPTITE	10	TT2 BIN 3X6 MFZN		
N3	7372300211	NUT SQUARE	2	4N-2-3 MFZN		
S3	7003300611	SCREW MACHINE	2	BIN 3X6 MFZN		
S2	7173200612	SCREW TAPPTITE	2	TT2 BIN 2X6 MFZN BK		
S1	7173200812	SCREW TAPPTITE	4	TT2 BIN 2X8 MFZN BK		
58		WINDOW SHEET-C	1	NITTO #500		
57		WINDOW SHEET-B	1	NITTO #500		
56		WINDOW SHEET-A	2	NITTO #500		
55	97T4410610	HEAT SINK	1	AL 6063-T5		
54	97T65A23MA	PCB MAIN	1	190X330X1.6/2 FR-1		
53	97T5603200	INSULATION MAIN	1	PC T=0.25		
52	97T0440300	COVER BOTTOM	1	SECC T=0.6		
51	97T0440400	COVER TOP	1	SECC T=0.6		
50	97T0635200	CHASSIS MAIN	1	SECC T1.0		
49	97T2448700	BRKT DOOR	1	SECC T=0.6		
48	97T4104700	NET DOOR	1	KIMLON		
47	97T3003200	SPRING LOCK	1	SUS D0.35XD3.8X9		
46	97T3105800	SCREW LOCK	1	TT2 2X10 MFZN		
45	97T2607700	HOOK LOCK	1	PC LEXAN-121 B.K		
44	97T3012100	SPRING PULL	2	SUS D=0.35		
43	97T1393000	KNOB PULL	2	ABS XR-404 BK		
42	97T2606010	HOOK B	1	STSP T=0.4		
41	97T1417000	ESCUTCHEON	1	ABS XR-404		
40	97T0930100	PLATE TRIM	1	ABS XR-404 BK		
39	97T2504200	SUPPORTER SPACE	1	NEOPRENE		
38	-	REMOCON	1	-		
37	97T2308300	HOLDER LCD	1	ABS XR-404,WHITE		
36	97T2226600	REFLCETION LCD	1	ACRYL+WHITE(SPRAY)		
35	97T9610000	SHEET LCD	1	TREPAL D112		
34	-	LCD	1	-		
33	97T0440200	COVER LCD	1	ET T=0.3		
32	-	DECHANISM	1	-		
31	97T6212700	CONNECTOR ISO	1	26P+15P		
30	97T659661S	PCB ISO	1	160X137.5X1.6/9		
29	-	DIN JACK	1	-		
28	-	ANT	1	-		
27	97T0635300	FRAME MOUNTING	1	SECC-A T=0.6		
26	97T2461000	BRACKET DECK R	1	SECC T=1.0		
25	97T2460900	BRACKET DECK F	1	SECC T=1.0		
24	97T0113400	CABINET BACK	1	ABS XR-404		
23	97T65A28FR	PCB FRONT	1	FR-1		
22	97T13G9700	KNOB POWER	1	PC LEXAN-121		
21	97T13G9800	KNOB VOL	1	ABS XR-404		
20	97T3009710	SPRING DETA	1	SUS D 0.3XD5.0X10.8		
19	97T4234100	CUSHION KNOB	1	SPONGE T 3.0		
18	97T2233400	REFLECTION SW	1	PC LEXAN-121		
17	9713H1500	KNOB RELEASE	1	PC LEXAN-121		
16	97T13H0800	KNOB AUT	1	PC LEXAN-121		
15	97T13H1400	KNOB PRESET 6	1	PC LEXAN-121		
14	97T13H1300	KNOB PRESET 5	1	PC LEXAN-121		
13	97T131200	KNOB PRESET 4	1	PC LEXAN-121		
12	97T13H1100	KNOB PRESET 3	1	PC LEXAN-121		
11	97T13H1000	KNOB PRESET 2	1	PC LEXAN-121		
10	97T13H0900	KNOB PRESET 1	1	PC LEXAN-121		
9	97T13H0700	KNOB SEL	1	PC LEXAN-121		
8	97T13H0600	KNOB MUTE/INFO	1	PC LEXAN-121		
7	97T13H0500	KNOB SCAN	1	PC LEXAN-121		
6	97T13H0400	KNOB TA/LOC	1	PC LEXAN-121		
5	97T13H0300	KNOB EJECT	1	PC LEXAN-121		
4	97T13H0200	KNOB SRC	1	PC LEXAN-121		
3	97T13H0100	KNOB TUNE UP/DN	1	PC LEXAN-121		
2	97T1611900	WINDOW DISPLAY	1	IDI IH-830H		
1	97T0113300	CABINET FRONT	1	ABS XR-404		
NO	PART CODE	PART NAME	QTY	MATL	SPECN.	REMARK

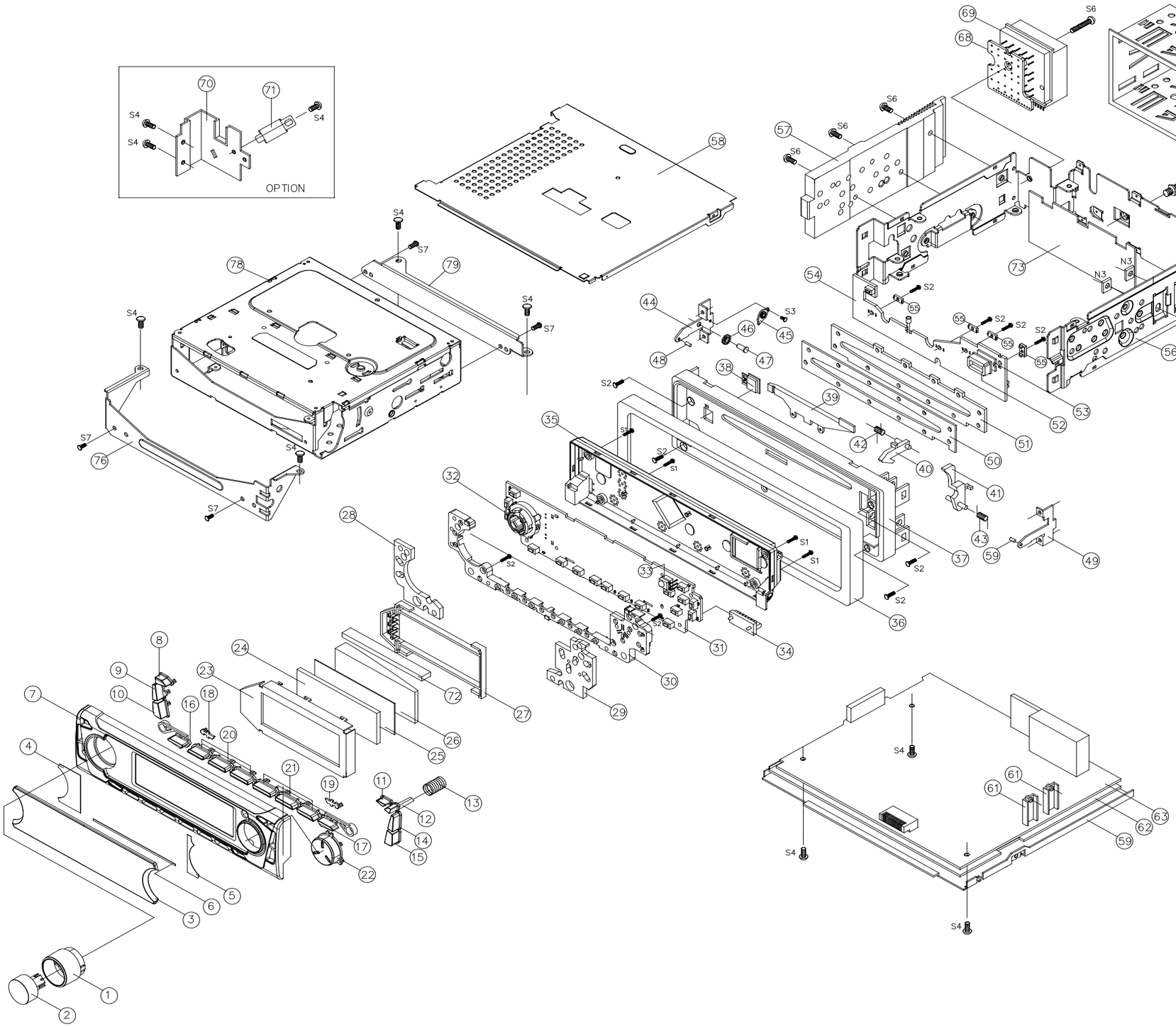

B1	97T3104900	BOLT HEX	1	SM20C M5X(3+2+10)	
S7	7173260512	SCREW TAPTITE	4	TT2 BIN 2.6X5 MFZN BK	
S6	7173301211	SCREW TAPTITE	1	TT2 BIN 3X12 MFZN	
S5	7173301011	SCREW TAPTITE	2	TT2 BIN 3X10 MFZN	
S4	7173300811	SCREW TAPTITE	16	TT2 BIN 3X8 MFZN	
S3	7173203512	SCREW TAPTITE	1	TT2 BIN 2X3.5 MFZN B.K	
S2	7173200612	SCREW TAPTITE	10	TT2 BIN 2X6 MFZN BK	
S1	7173201212	SCREW TAPTITE	4	TT2 BIN 2X12 MFZN B.K	
N3	7372300211	NUT SQUARE	2	4N-2-3 MFZN	
74	9T16368700	SOCKET DIN	1	LN-0505-008 WIRE TYPE	
73	97T5603500	INSULATION TUNER	1	PE T=0.25	
72	97T6229600	CONN ZEBRA	1	-	
71	97T2409930	BRKT CONN	1	SECC	
70	97T2451100	BRACKET CONN	1	SECC T1.0	OPTION
69	97T8856100	CONN AS	1	ISO 16P WITH 10A FUSE	
68	97T6596615	PCB ISO	1	160X137.5X1.6/9	
67	97T2461000	BRACKET DECK R	1	SECC T1.0	
66	-	KOMEC-200	1	-	
65	97T2460900	BRACKET DECK F	1	SECC T1.0	
64	97T0628200	FRAME MOUNTING	1	SECC T0.6	
63	97T65A81MA	PCB MAIN	1	XPC	
62	97T5603200	INSULATION MAIN	1	PC T0.25	
61	97T2307000	HOLDER REG	2	PC LEXAN 121 B.K	
60	97T6802500	JACK ANT	1	9.5X20X27.5	
59	97T0440300	COVER BOTTOM	1	SECC T0.6	
58	97T0440400	COVER TOP	1	SECC T0.6	
57	97T4410600	HEAT SINK	1	AL 6063-T5	
56	97T0635200	CHASSIS MAIN	1	SECC T1.0	
55	97T2448800	BRACKET PCB	4	ABS XR-404	
54	97T6599DES	PCB ESC	1	FR-1	
53	97T0929500	PLATE PCB	1	PC	
52	97T6234900	CONNECTOR	1	FPS1442X(SOCKET)	
51	97T2448700	BRKT DOOR	1	SECC T=0.6	
50	97T4104700	NET DOOR	1	KIMLON	
49	97T2449000	BRACKET PANEL R	1	SECC T1.0	
48	97T2100100	HINGE BRKT PANEL	2	C3604	
47	97T3603700	SHAFT BRKT PANEL	1	BSBM	
46	97T2700400	GEAR MIDDLE	1	P.O.M	
45	97T2610600	DAMPER GEAR	1	P.O.M	
44	97T2448900	BRACKET PANEL L	1	SECC T1.0	
43	97T3015700	SPRING PUSH	1	SUS-304	
42	97T3015600	SPRING HOOK	1	SUS-304	
41	97T2610400	LEVER PUSH	1	ABS XR-404	
40	97T2610500	LEVER HOOK	1	ABS XR-404	
39	97T2226900	REFLECTION DOOR	1	PC LEXAN 121 CLEAR	
38	97T13E2000	KNOB EJECT	1	PC LEXAN 121 MILKY	
37	97T1416100	ESCUTCHEON	1	ABS XR-404	
36	97T0929200	PLATE TRIM	1	ABS XR-404	
35	97T0111700	CABINET BACK	1	ABS XR-404	
34	97T6235000	CONN-FLIP(PLUG)	1	FPP1444X	
33	97T2504200	SUPPORTER SPACE	1	FELT	OPTION
32	5V3503A71A	ENCODER VOLUME	1	EC22B20-ZZZ	
31	97T65A85FR	PCB FRONT	1	FR-4	
30	97T2233500	REFLECTION KNOB	1	PC LEXAN 121 CLEAR	
29	97T4234300	CHSHION KNOB R	1	SPONGE T=3.0	
28	97T4234200	CHSHION KNOB L	1	SPONGE T=3.0	
27	97T2308500	HOLDER LCD	1	PC LEXAN 121 WHITE	
26	97T2227000	REFLECTION LCD	1	PC LEXAN 121 CLEAR	
25	97T9609200	SHEET LCD	1	PC D114	
24	97T0L1630N	LCD BLACKMASKING	1	KXN35844AAB	
23	97T2449100	BRACKET LCD	1	SECC T=1.0	
22	97T13H2500	KNOB BAND	1	PC LEXAN-121	
21	97T13H2900	KNOB PRESET R	1	PC LEXAN-121	
20	97T13H2800	KNOB PRESET L	1	PC LEXAN-121	
19	97T0446700	CAP AUT KNOB	1	PC LEXAN-121 MILKY	
18	97T0446600	CAP SEL KNOB	1	PC LEXAN-121 MILKY	
17	97T13H2700	KNOB AUT	1	ACRYL IH-830H	
16	97T13H2600	KNOB SEL	1	ACRYL IH-830H	
15	97T13H2100	KNOB INFO	1	PC LEXAN-121	
14	97T13H2000	KNOB LOC	1	PC LEXAN-121	
13	97T3015000	SPRING OPEN	1	SUS 304	
12	97T13H2200	KNOB OPEN	1	ABS XR-404	
11	97T13H1900	KNOB SCAN	1	PC LEXAN-121	
10	97T13H1800	KNOB MUTE	1	PC LEXAN-121	
9	97T13H1700	KNOB SRC	1	PC LEXAN-121	
8	97T13H1600	KNOB TA	1	PC LEXAN-121	
7	97T0113500	CABINET FRONT	1	ABS XR-404	
6	97T9612900	SHEET WINDOW DOWN	1	DOUBLE TAPE	
5	97T9613000	SHEET WINDOW R	1	DOUBLE TAPE	
4	97T9613100	SHEET WINDOW L	1	DOUBLE TAPE	
3	97T1611900	WINDOW DISPLAY	1	ACRYL IH-830H	
2	97T13H2400	KNOB POWER	1	PC LEXAN-121	
1	97T13H2300	KNOB VOL	1	ABS XR-404	
1		EXPLODED VIEW	1		
No.	PART CODE	PART NAME	Q'TY	MATL SPECN.	REMARK

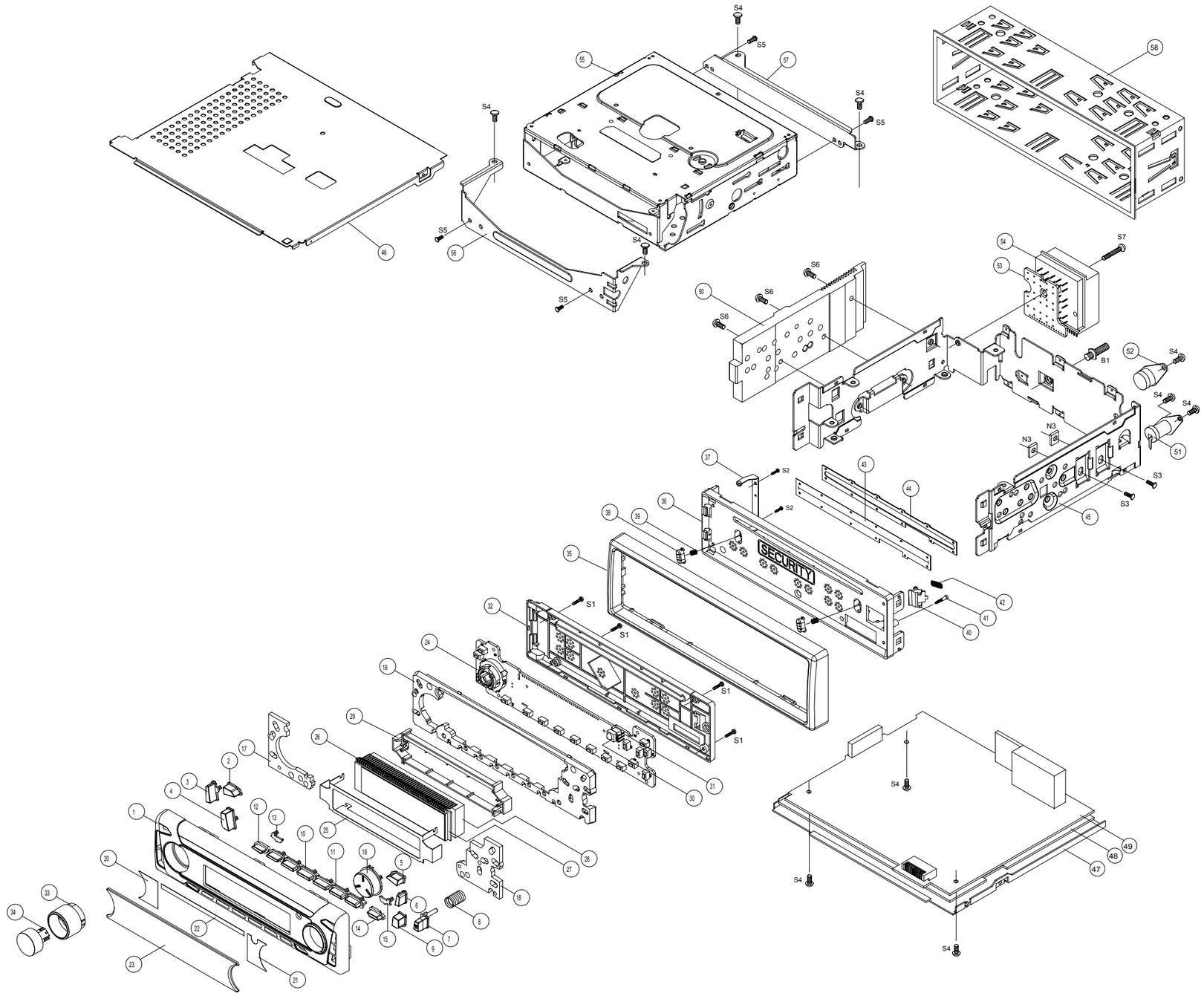

No.	PART CODE	PART NAME	Q'TY	MATL SPECN.	REMARK
B1	97T3104900	BOLT HEX	1	SM20C M5X(3+2+10) MFZN	
S7	7173301211	SCREW TAPPTITE	1	TT2 BIN 3X12 MFZN	
S6	7173300811	SCREW TAPPTITE	3	TT2 BIN 3X8 MFZN	
S5	7173260512	SCREW TAPPTITE	4	TT2 BIN 2.6X5 MFZN BK	
S4	7173300611	SCREW TAPPTITE	10	TT2 BIN 3X6 MFZN	
N3	7372300211	NUT SQUARE	2	4N-2-3 MFZN	
S3	7003300611	SCREW MACHINE	2	BIN 3X6 MFZN	
S2	7173200612	SCREW TAPPTITE	2	TT2 BIN 2X6 MFZN BK	
S1	7173201012	SCREW TAPPTITE	4	TT2 BIN 2X10 MFZN BK	
58	97T0635300	FRAME MOUNTING	1	SECC-A T=0.6	
57	97T2461000	BRACKET DECK R	1	SECC T=1.0	
56	97T2460900	BRACKET DECK F	1	SECC T=1.0	
55	-	KOMEC-200	1	-	
54	97T6212700	CONNECTOR ISO	1	26P+15P	
53	97T659661S	PCB ISO	1	160X137.5X1.6/9	
52	-	DIN JACK	1	-	
51	-	ANT	1	-	
50	97T4410610	HEAT SINK	1	AL 6063-T5	
49	97T65A81MA	PCB MAIN	1	190X330X1.6/2 FR-1	
48	97T5603200	INSULATION MAIN	1	PC T=0.25	
47	97T0440300	COVER BOTTOM	1	SECC T=0.6	
46	97T0440400	COVER TOP	1	SECC T=0.6	
45	97T0635200	CHASSIS MAIN	1	SECC T1.0	
44	97T2448700	BRKT DOOR	1	SECC T=0.6	
43	97T4104700	NET DOOR	1	KIMLON	
42	97T3003200	SPRING LOCK	1	SUS D0.35XD3.8X9	
41	97T3105800	SCREW LOCK	1	TT2 2X10 MFZN	
40	97T2607700	HOOK LOCK	1	PC LEXAN-121 B.K	
39	97T3012100	SPRING PULL	2	SUS D=0.35	
38	97T1393000	KNOB PULL	2	ABS XR-404 BK	
37	97T2606010	HOOK B	1	STSP T=0.4	
36	97T1417000	ESCUTCHEON	1	ABS XR-404	
35	97T0930100	PLATE TRIM	1	ABS XR-404 BK	
34	97T13H2400	KNOB POWER	1	PC LEXAN-121	
33	97T13H2300	KNOB VOL	1	ABS XR-404	
32	97T0113800	CABINET BACK	1	ABS XR-404	
31	97T2504200	SUPPORTER SPACE	1	NEOPRENE	
30	-	REMOCON	1	-	
29	97T2308300	HOLDER LCD	1	ABS XR-404,WHITE	
28	97T2226600	REFLCETION LCD	1	ACRYL+WHITE(SPRAY)	
27	97T9610000	SHEET LCD	1	TREPAL D112	
26	-	LCD	1	-	
25	97T0440200	COVER LCD	1	ET T=0.3	
24	97T65A86FR	PCB FRONT	1	190X130X1.6/3 FR-4	
23	97T1612000	WINDOW DISPLAY	1	ACRYL IH-830H	
22	97T9613200	SHEET WINDOW UP	1	DOUBLE TAPE	
21	97T9613300	SHEET WINDOW R	1	DOUBLE TAPE	
20	97T9613400	SHEET WINDOW L	1	DOUBLE TAPE	
19	97T2233600	REFLECTION KNOB	1	PC LEXAN-121	
18	97T4234500	CUSHION KNOB R	1	SPONGE T 3.0	
17	97T4234400	CUSHION KNOB L	1	SPONGE T 3.0	
16	97T13H3700	KNOB BAND	1	PC LEXAN-121	
15	97T0446900	CAP AUT KNOB	1	PC LEXAN-121 MILKY	
14	97T13H3900	KNOB AUT	1	ACRYL IH-830H	
13	97T0446800	CAP SEL KNOB	1	PC LEXAN-121 MILKY	
12	97T13H3800	KNOB SEL	1	ACRYL IH-830H	
11	97T13H4100	KNOB PRESET R	1	PC LEXAN-121	
10	97T13H4000	KNOB PRESET L	1	PC LEXAN-121	
9	97T13H3500	KNOB INFO	1	PC LEXAN-121	
8	97T3009710	SPRING DETA	1	SUS D 0.3XD5.0X10.8	
7	97T13H3600	KNOB RELEASE	1	ABS XR-404	
6	97T13H3400	KNOB LOC	1	PC LEXAN-121	
5	97T13H3300	KNOB EJECT	1	PC LEXAN-121	
4	97T13H3200	KNOB MUTE	1	PC LEXAN-121	
3	97T13H3100	KNOB SRC	1	PC LEXAN-121	
2	97T13H3000	KNOB TA	1	PC LEXAN-121	
1	97T0113700	CABINET FRONT	1	ABS XR-404	
1		EXPLODED VIEW			

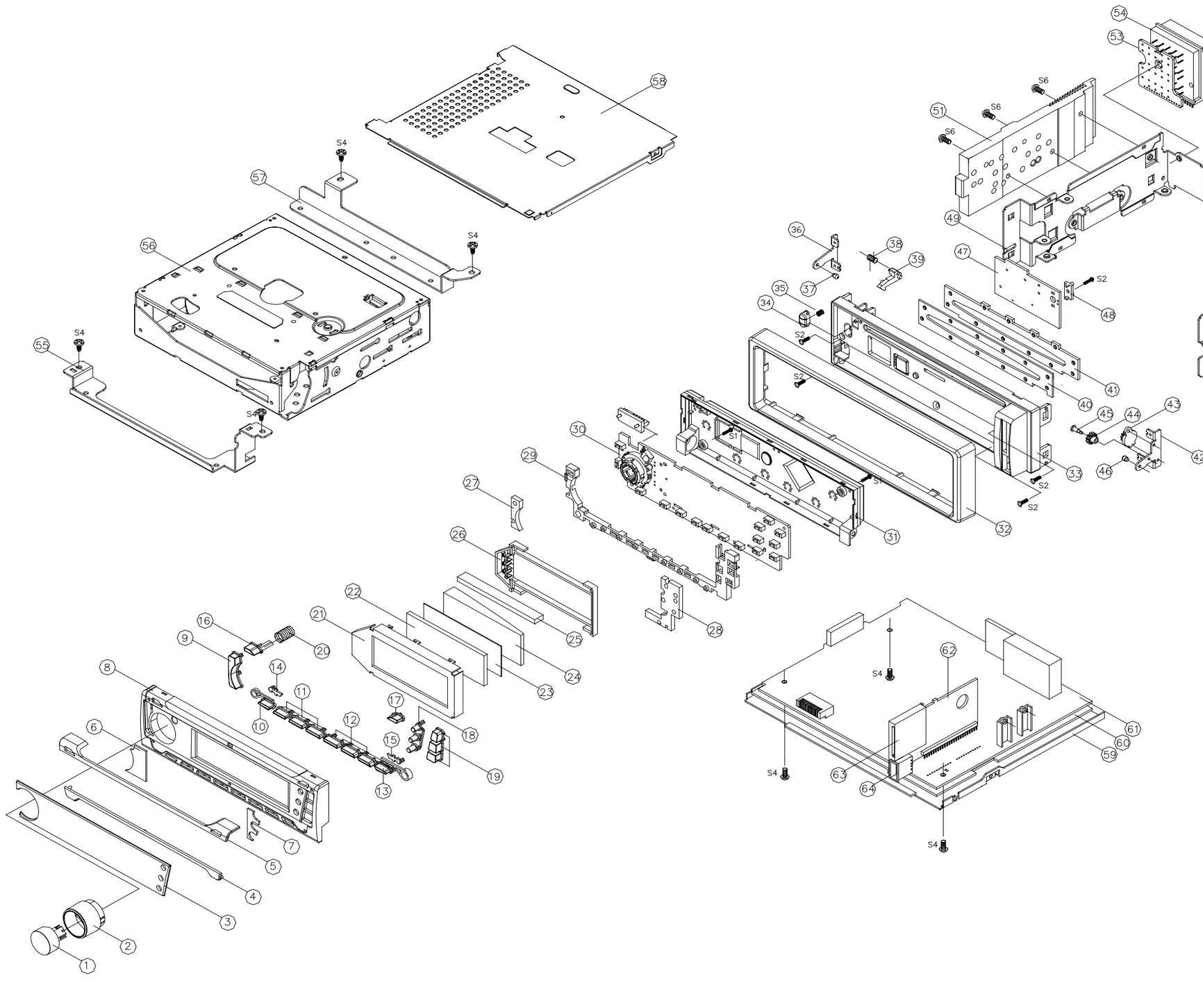

No.	PART CODE	PART NAME	Q'TY	MATL	REMARK
B1	97T3104900	BOLT HEX	1	SM20C M5X(3+2+10)	
S7	7173260512	SCREW TAPTITE	4	TT2 BIN 2.6X5 MFZN BK	
S6	7173301211	SCREW TAPTITE	1	TT2 BIN 3X12 MFZN	
S5	7173301011	SCREW TAPTITE	2	TT2 BIN 3X10 MFZN	
S4	7173300811	SCREW TAPTITE	16	TT2 BIN 3X8 MFZN	
S3	7173203512	SCREW TAPTITE	1	TT2 BIN 2X3.5 MFZN BK	
S2	7173200612	SCREW TAPTITE	10	TT2 BIN 2X6 MFZN BK	
S1	7173201212	SCREW TAPTITE	4	TT2 BIN 2X12 MFZN BK	
N3	7372300211	NUT SQUARE	2	4N-2-3 MFZN	
64	-	USB	1	-	
63	-	SD CARD	1	-	
62	97T65AB2MM	PCB USB	1		
61		PCB MAIN	1	XPC	
60	97T5603200	INSULATION MAIN	1	PC T0.25	
59	97T0440300	COVER BOTTOM	1	SECC T0.6	
58	97T0440400	COVER TOP	1	SECC T0.6	
57	97T2461100	BRACKET DECK R	1	SECC T=1.0	
56	-	KOMEC-200	1	-	
55	97T2461200	BRACKET DECK F	1	SECC T=1.0	
54	97T8856100	CONN AS	1	ISO 16P WITH 10A FUSE	
53	97T659661S	PCB ISO	1	160X137.5X1.6/9	
52	97T6234900	CONNECTOR	1	FPS142X(SOCKET)	
51	97T4410600	HEAT SINK	1	AL 6063-T5	
50	-	JACK ANT	1	-	
49	97T0635200	CHASSIS MAIN	1	SECC T1.0	
48	97T0929500	PLATE PCB	1	PC	
47	97T65AB2ES	PCB ESC	1		
46	97T2100100	HINGE BRKT PANEL	1	C3604	
45	97T3603700	DAMPER GEAR	1	P.O.M	
44	97T2700400	SHAFT BRKT PANEL	1	BSBM	
43	97T2610600	DAMPER GEAR	1	P.O.M	
42	97T2461400	BRACKET ESC R	1	SECC T=1.0	
41	97T2448700	BRKT DOOR	1	SECC T=0.6	
40	97T4104700	NET DOOR	1	KIMLON	
39	97T2610500	LEVER HOOK	1	ABS XR-404	
38	97T2610600	SPRING HOOK	1	SUS-304	
37	97T2100100	HINGE BRKT PANEL	1	C3604	
36	97T2461300	BRACKET ESC L	1	SECC T=1.0	
35	97T3012100	SPRING PULL	1	SUS P10.3	
34	97T1393000	KNOB PULL	1	ABS XR-404	
33	97T1418900	ESCUTCHEON	1	ABS XR-404	OPTION
32	97T0929200	PLATE TRIM	1	ABS XR-404	
31	97T0114000	CABINET BACK	1	PC LEXAN-121	
30	97T65AB5FR	PCB FRONT	1	FR-4	
29	97T2233700	REFLECTION KNOB	1	PC LEXAN 121 CLEAR	
28	97T4234700	CHSHION KNOB R	1	SPONGE T=3.0	
27	97T4234600	CHSHION KNOB L	1	SPONGE T=3.0	
26	97T2227000	REFLECTION LCD	1	PC LEXAN 121 CLEAR	
25	97T6229600	CONN ZEBRA	1	-	
24	97T9609200	SHEET LCD	1	PC DI14	
23	97T2449100	BRACKET LCD	1	SECC T=1.0	
22	97T0L1630N	LCD BLACKMASKING	1	KXN35844AAB	
21	97T2449100	BRACKET LCD	1	SECC T=1.0	
20	97T3015000	SPRING OPEN	1	SUS-304	
19	97T13H4700~4900	KNOB LOC/BAND/INFO	1	PC LEXAN-121	
18	97T13H4400~4600	KNOB SCAN/TA/MUTE	1	PC LEXAN-121	
17	97T13H4300	KNOB SRC	1	PC LEXAN-121	
16	97T13H5000	KNOB OPEN	1	ABS XR-404	
15	97T0446700	CAP AUT KNOB	1	PC LEXAN-121 MILKY	
14	97T0446600	CAP SEL KNOB	1	PC LEXAN-121 MILKY	
13	97T13H2700	KNOB AUT	1	ACRYL IH-830H	
12	97T13H2900	KNOB PRESET R	1	PC LEXAN-121	
11	97T13H2800	KNOB PRESET L	1	PC LEXAN-121	
10	97T13H2600	KNOB SEL	1	ACRYL IH-830H	
9	97T13H4200	KNOB TUNE UP/DN	1	PC LEXAN-121	
8	97T0113900	CABINET FRONT	1	ABS XR-404	
7	97T9614200	SHEET WINDOW R	1	DOUBLE TAPE	
6	97T9614100	SHEET WINDOW L	1	DOUBLE TAPE	
5	97T1003200	DECORATION UP	1	ABS XR-404	
4	97T1003300	DECORATION DN	1	ABS XR-404	
3	97T1612100	WINDOW DISPLAY	1	ACRYL IH-830H	
2	97T13H2300	KNOB VOL	1	ABS XR-404	
1	97T13H2400	KNOB POWER	1	PC LEXAN-121	

DAEWOO ELECTRONICS

050901
edited & printed
by maccem ①